Huetter
MILL AND CABINET
ANNIVERSARY
70
YEAR
ANNIVERSARY
Huetter Molding
and Stair Parts
ph: 801-266-3222
toll free: 800-246-3225
www.huettermill.com
4730 South 500 West • Murray, UT 84123

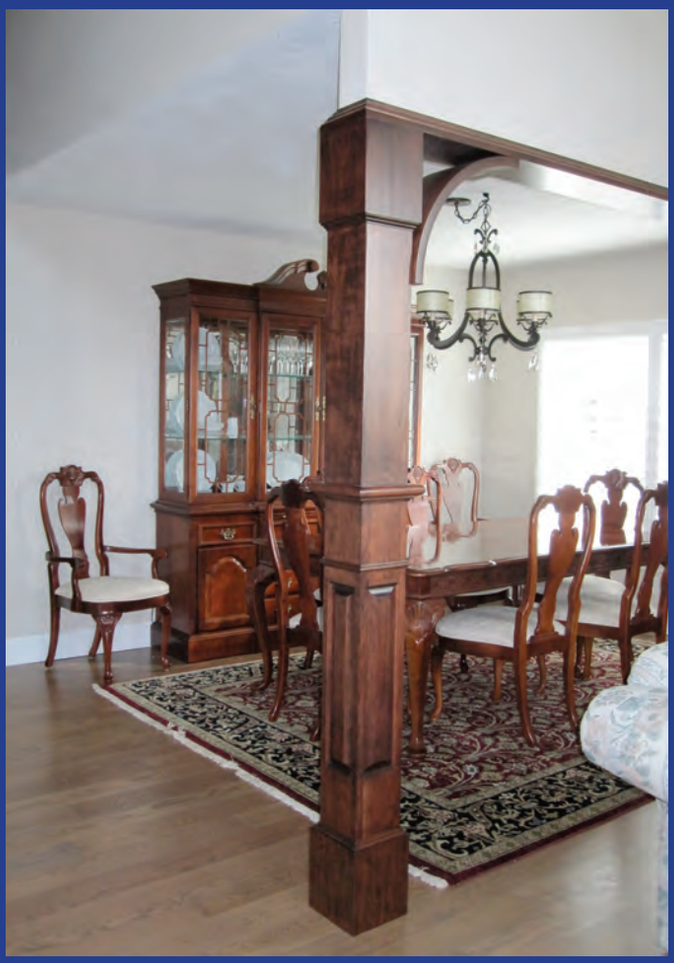

Huetter

MILL AND CABINET

"Quality and Craftsmanship Live In Our Name"

4730 South 500 West • P.O. Box 57457
Murray, Utah 84157-0457

Member: Architectural Woodwork Institute

Huetter Mill & Cabinet manufactures beautiful hardwood moldings, stocked in alder, knotty alder, maple, poplar, cherry, oak, and hickory. We select only the best materials available. We offer a quality product, free from defects and at **competitive** prices. We use the most technologically advanced machinery available in the industry. We employ superior craftsmen to insure you receive a quality product.

Huetter Mill & Cabinet displays its moldings in a spacious showroom located at 4730 South 500 West, Murray, Utah. When visiting our showroom you will find knowledgeable sales personnel to assist you in your decisions. There are displays to show you our wide selections of molding profiles available, as well as different woods available in those profiles. We can also give you the option to have custom woods made into your choice of moldings at an additional cost. We have an extensive inventory of custom knives to ensure you that one of a kind look you may be searching for as well. We offer you samples available to take home or to show your customers.

Our display of stair parts offers you a first hand view of what your new railing will look like. We display the old world look of box newels with metal balusters, in many, many designs, as well as traditional designs in turned balusters and turned newels. If you are looking for a rustic knotty alder look, an arts and craft look, or if you want to be creative, we have samples here to help you put your own designs together. We can also offer skilled craftsman to install your railings as well.

Our catalog is organized in three parts; stock moldings, custom design (non stock) moldings, and stair parts. We show our moldings drawn to full scale so you can have a better idea of shape and size. The key at the bottom of the page tells you which moldings are available in stock, and in each wood: O=Oak, A=Alder, KA=Knotty Alder, P=Poplar, C=Cherry, M=Maple, SM=Soft Maple, H=Hickory. Please call our Will Call department for quotes on all of your woodworking needs **(801) 266-3222 or (800) 246-3225.**

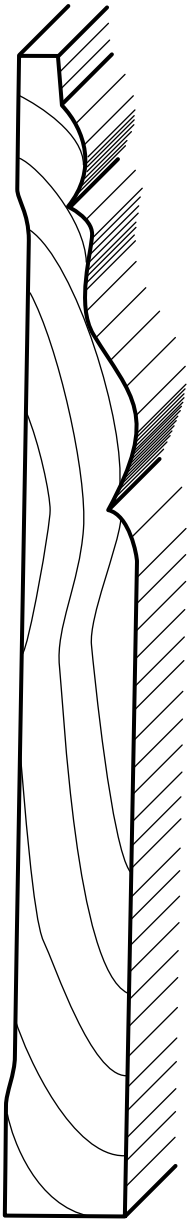

HM 149
5/8” x 6”

KA

HM 146
5/8” x 5 1/2”

O
KA
P

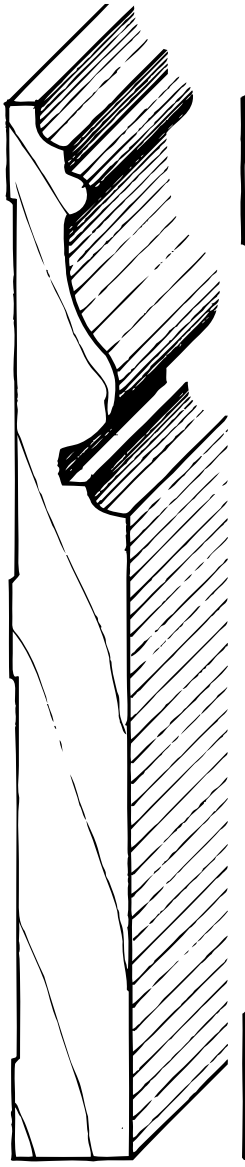

HM 145
5/8” x 5 1/2”

O
C
M
P

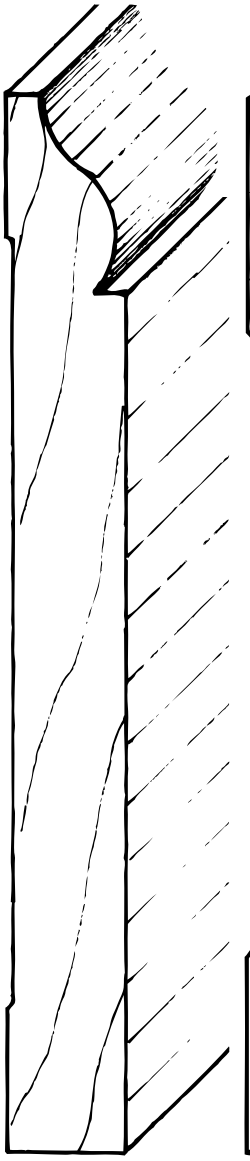

HM 1109
5/8” x 5 1/2”

KA
P

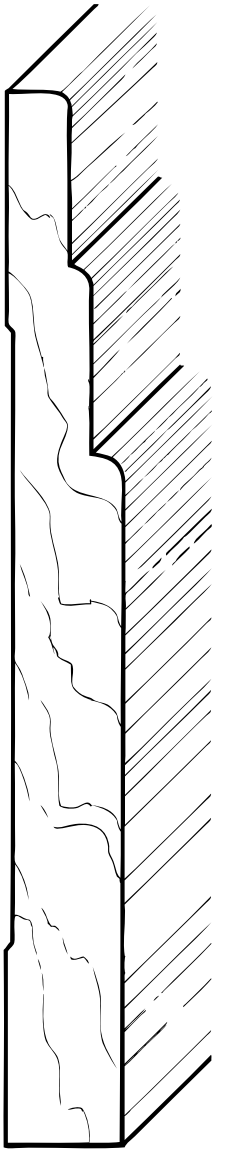

HM 158
5/8” x 5 1/2”

KA

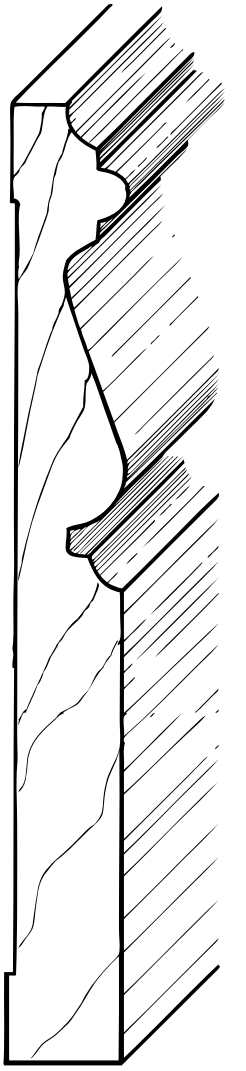

HM 147
5/8” x 5”

KA
H

LEGEND: **O**=Oak, **A**=Alder, **KA**=Knotty Alder, **P**=Poplar, **C**=Cherry **M**=Maple, **SM**=Soft Maple, **H**=Hickory

(FOR ADDITIONAL CUSTOM BASES SEE PP. 25-27 AND 40)

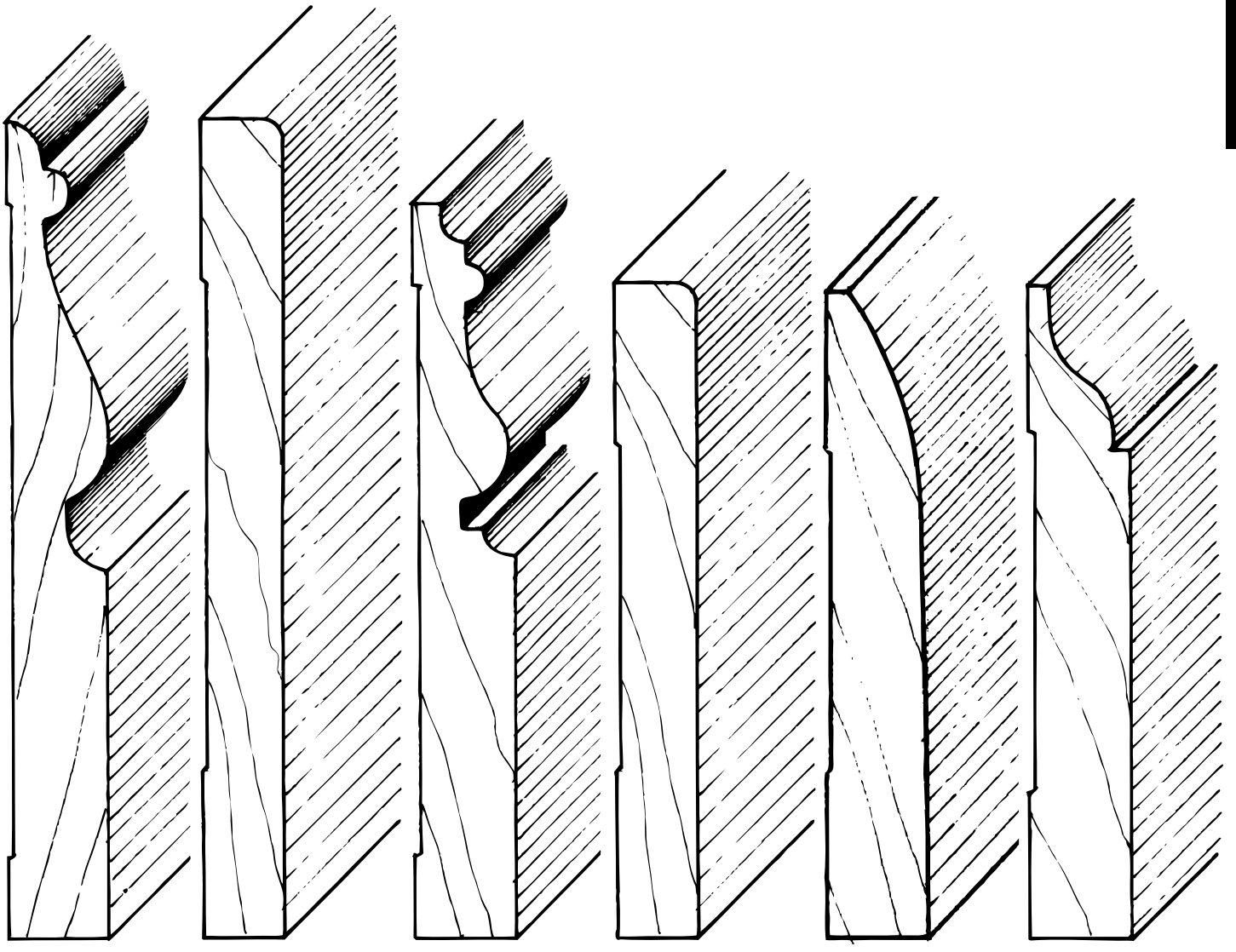

HM 134	HM 114.5	HM 144	HM 114	HM 116	HM 122
5/8” x 5”	1/2” x 5”	5/8” x 4 1/2”	1/2” x 4”	5/8” x 4”	5/8” x 4”
O P	KA	O P	O P	O P	O P

(FOR ADDITIONAL CUSTOM BASES SEE PP. 25-27 AND 40)

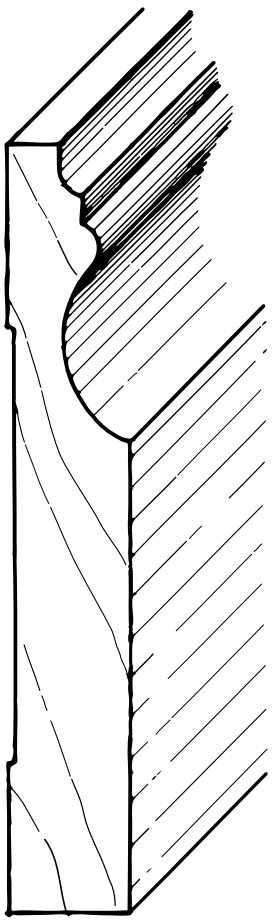

HM 128
5/8” x 4”

O
P

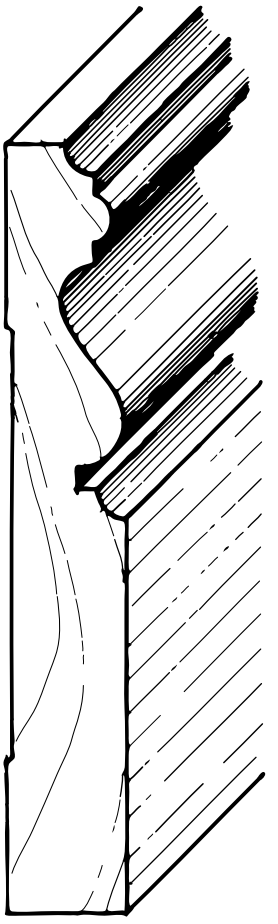

HM 136
5/8” x 4”

O
A
C
M
P

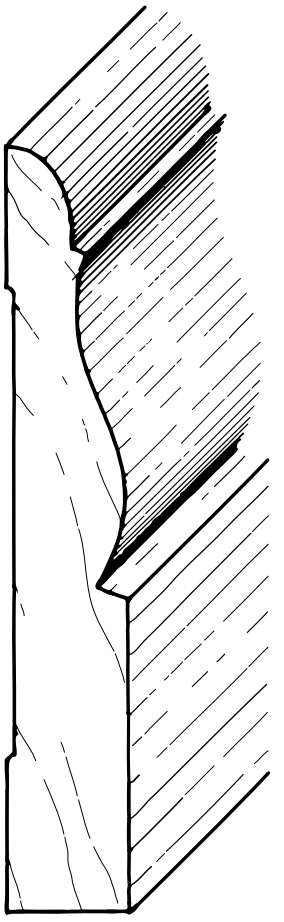

HM 138
5/8” x 4”

O
P

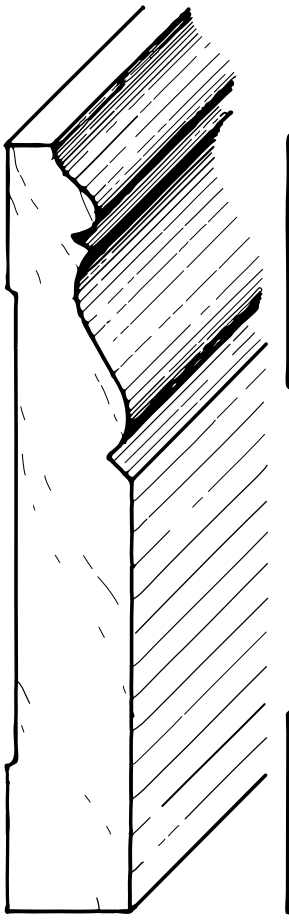

HM 139
5/8” x 4”

O

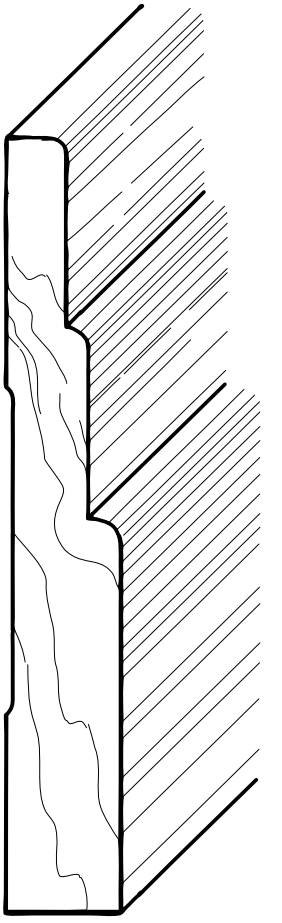

HM 148
5/8” x 4”

O
P

LEGEND: **O**=Oak, **A**=Alder, **KA**=Knotty Alder, **P**=Poplar, **C**=Cherry, **M**=Maple, **SM**=Soft Maple, **H**=Hickory

(FOR ADDITIONAL CUSTOM BASES SEE PP. 25-27 AND 40)

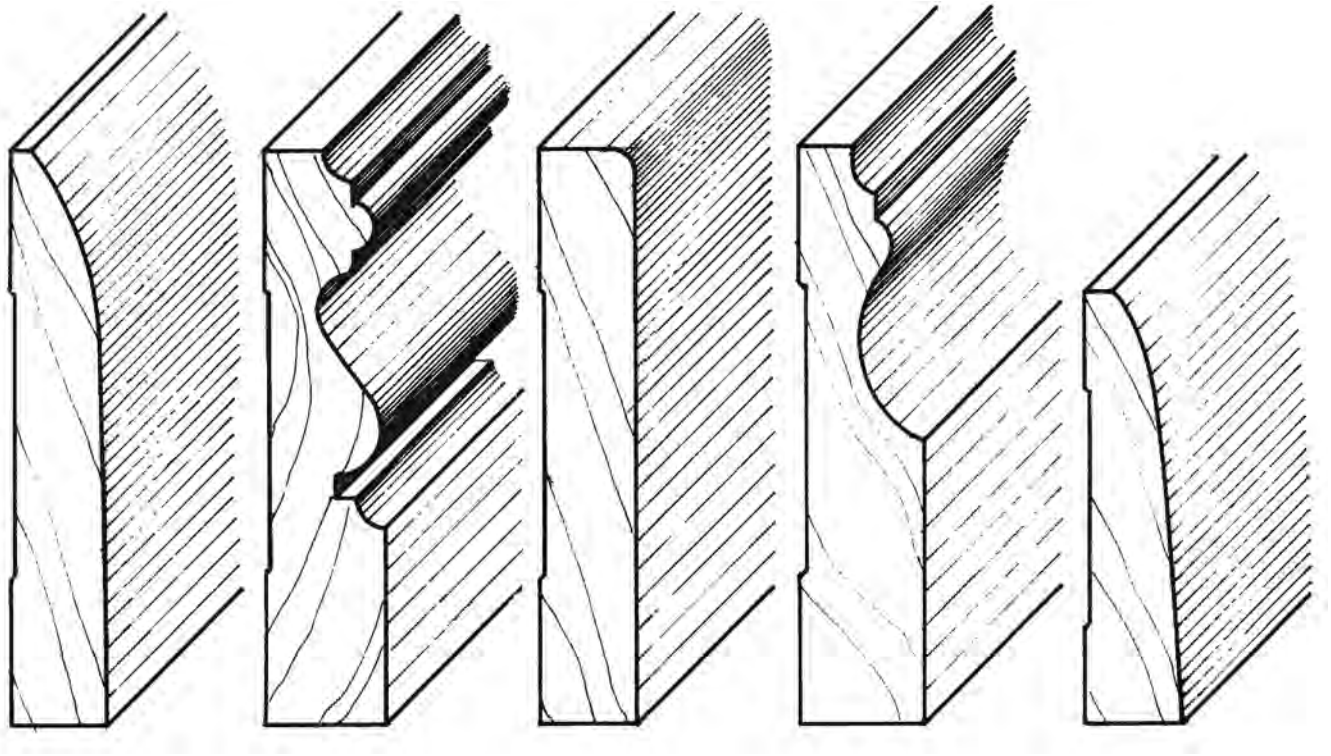

HM 131
1/2” x 3”
O

HM 132
5/8” x 3”
O
P

HM 135
1/2” x 3”
O
P

HM 140
5/8” x 3”
O
A
P

HM 130
1/2” x 2 1/4”
O

(FOR ADDITIONAL CUSTOM BASES SEE PP. 25-27 AND 40)

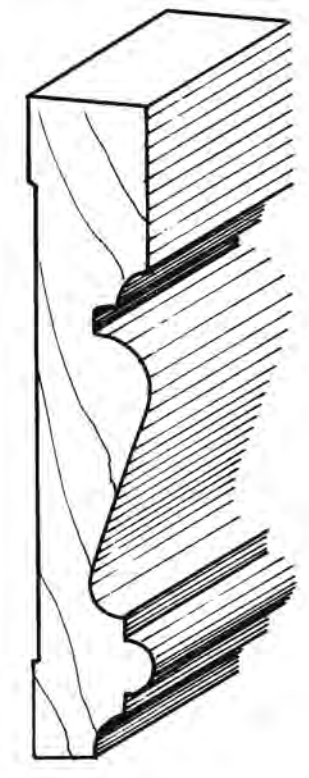

HM 163
5/8” x 3 1/2”

O

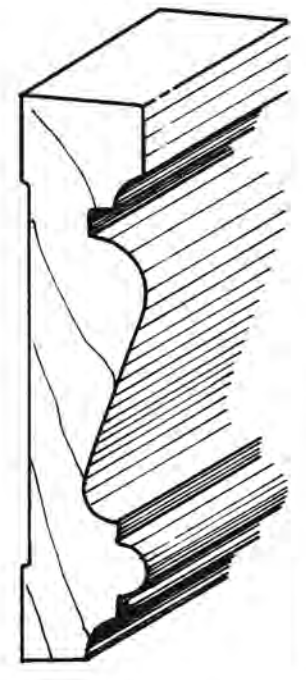

HM 178
5/8” x 3”

O
P

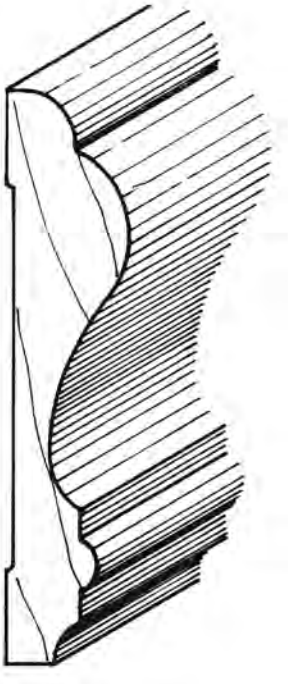

HM 179
5/8” x 3”

O
KA
P

LEGEND: **O**=Oak, **A**=Alder, **KA**=Knotty Alder, **P**=Poplar, **C**=Cherry, **M**=Maple, **SM**=Soft Maple, **H**=Hickory

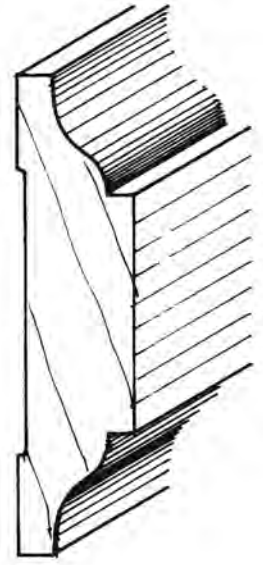

HM 191
5/8” x 2 1/2”

O
P

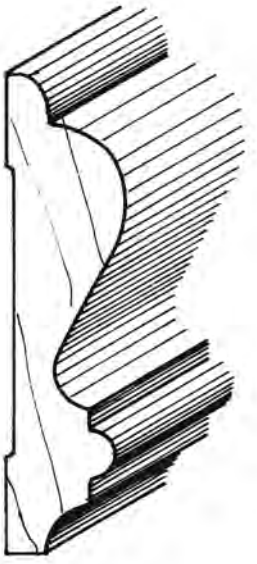

HM 192
5/8” x 2 1/2”

O
P

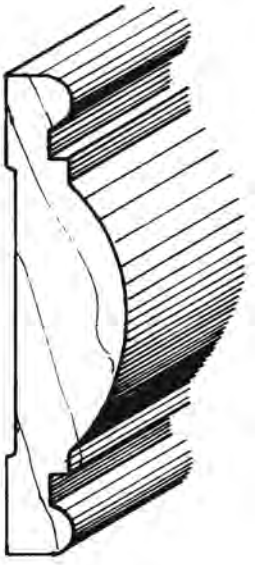

HM 194
5/8” x 2 1/2”

O
P

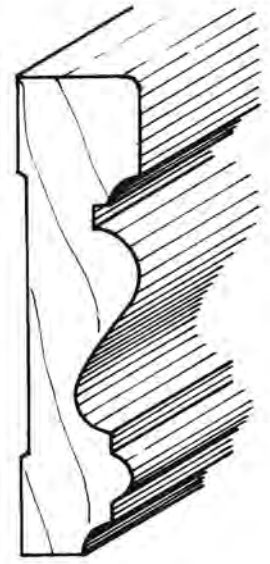

HM 196
5/8” x 2 1/2”

O
P

HM 197
5/8” x 2 1/2”

O
P

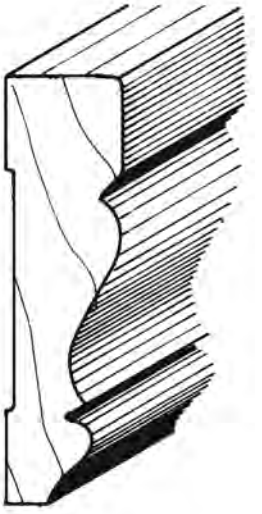

HM 199
5/8” x 2 1/4”

O
A
M
P

(FOR ADDITIONAL CUSTOM CHAIR RAIL SEE PP. 28-29)

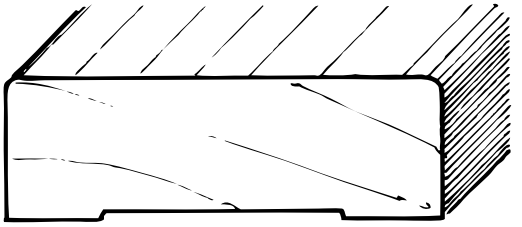

O
P

HM 202 3/4” x 2 1/4”

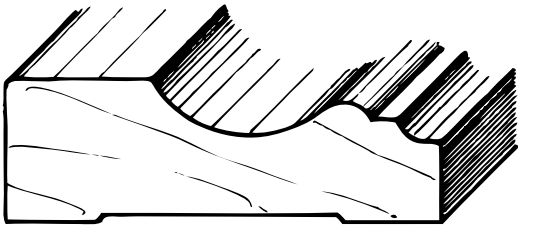

O
P

HM 216 3/4” x 2 1/4”

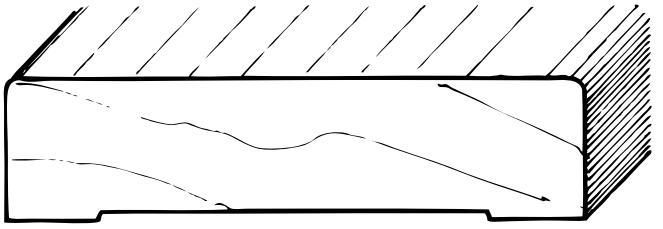

P
KA

HM2023 3/4” x 3”

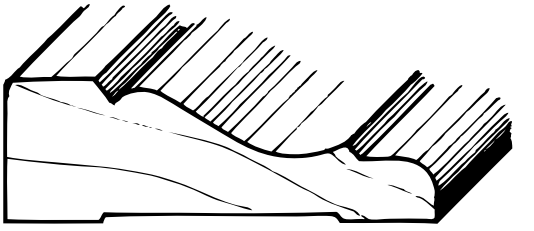

O
KA
P

HM 221 3/4” x 2 1/4”

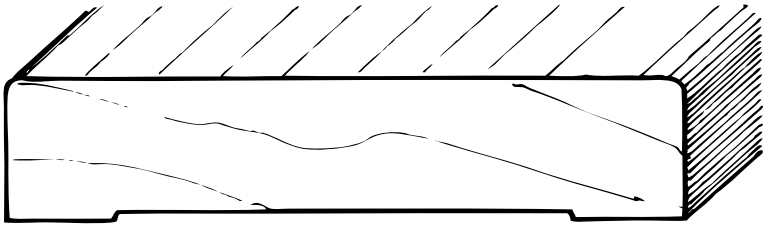

HM20235 3/4” x 3 1/2” P

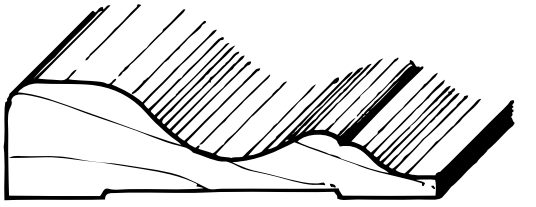

O
A

HM 222 5/8” x 2 1/4”

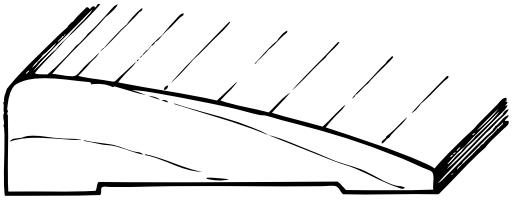

O

HM 206 5/8” x 2 1/4”

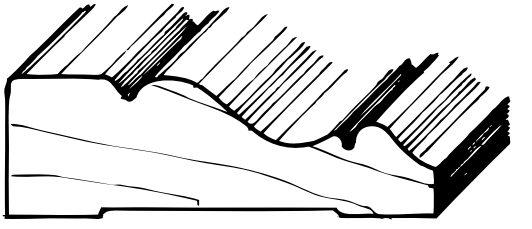

O

HM 223 3/4” x 2 1/4”

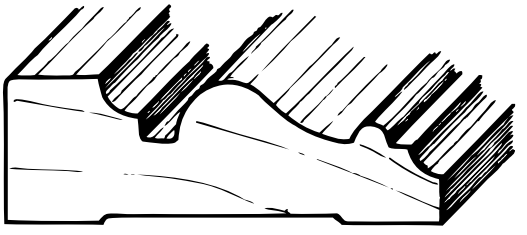

O
A
C
M
P

HM 212 3/4” x 2 1/4”

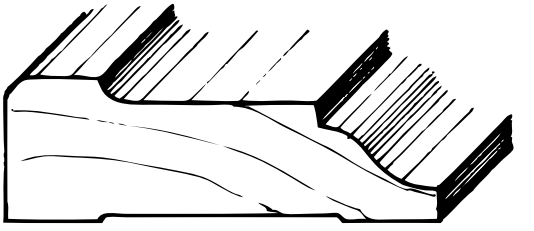

O
P

HM 224 3/4” x 2 1/4”

(FOR ADDITIONAL CUSTOM CASING SEE PP. 29-32)

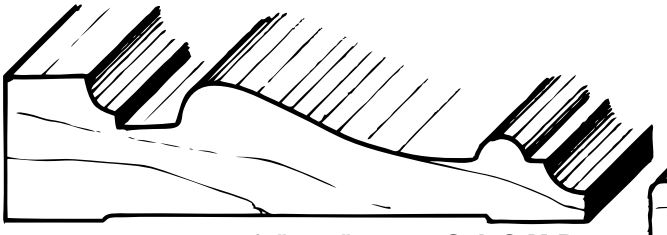

HM 217 3/4” x 3” **O A C M P**

HM 227 13/16” x 3 1/2” **O KA P**

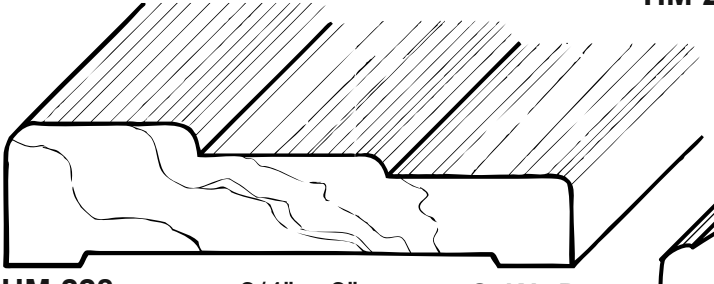

HM 228 3/4” x 3” **O KA P**

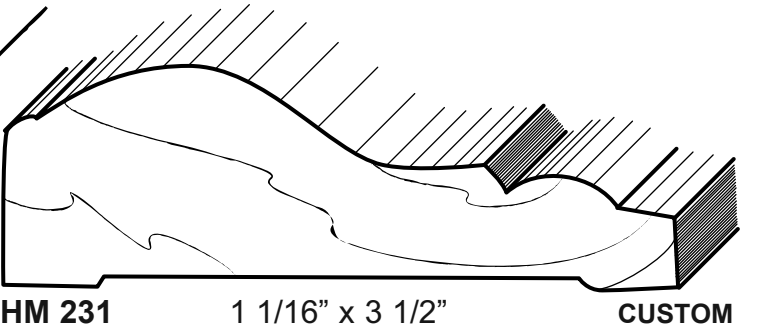

HM 231 1 1/16” x 3 1/2” **CUSTOM**

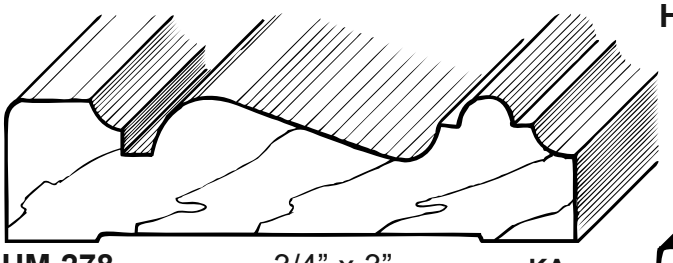

HM 278 3/4” x 3” **KA H**

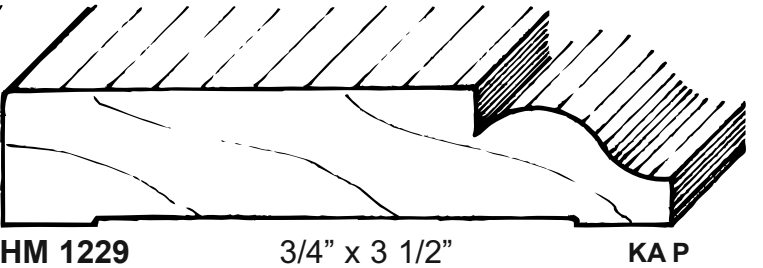

HM 1229 3/4” x 3 1/2” **KA P**

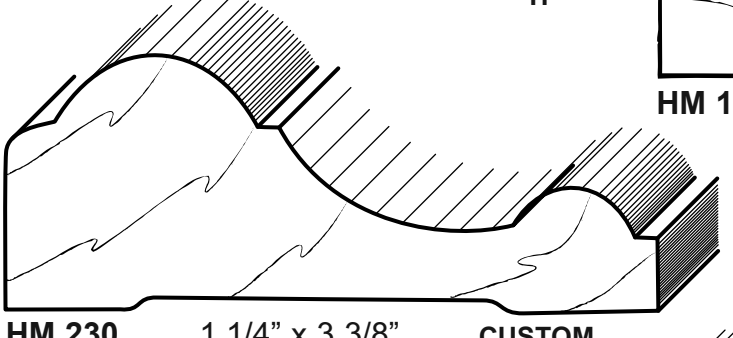

HM 230 1 1/4” x 3 3/8” **CUSTOM**

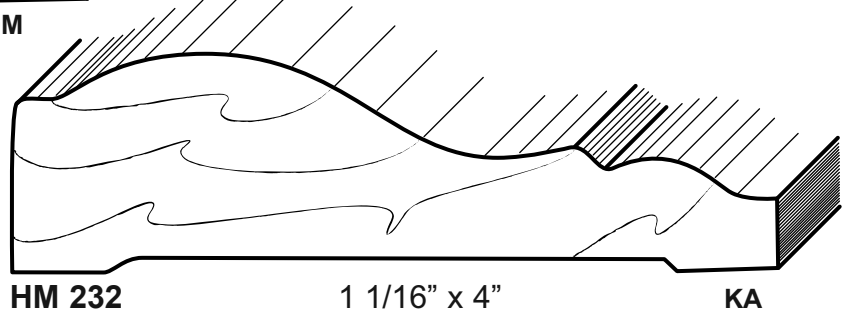

HM 232 1 1/16” x 4” **KA**

(FOR ADDITIONAL CUSTOM CASING SEE PP. 29-32)

LEGEND: **O**=Oak, **A**=Alder, **KA**=Knotty Alder, **P**=Poplar, **C**=Cherry, **M**=Maple, **SM**=Soft Maple, **H**=Hickory

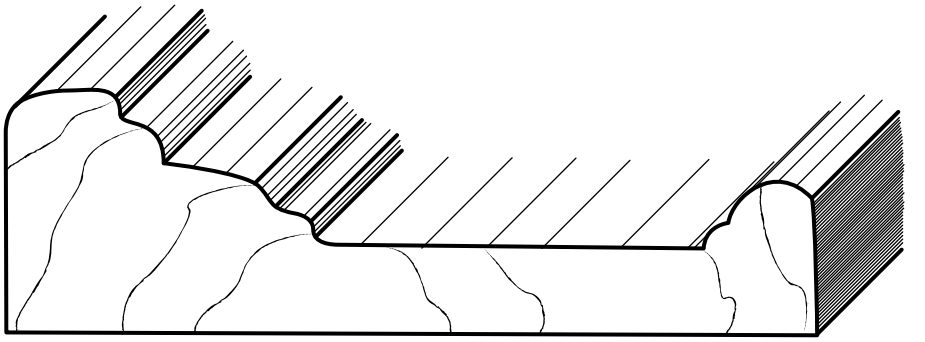

HM 233
1 1/4” x 4 3/16”
P KA

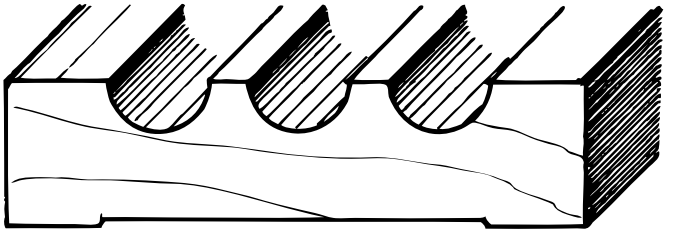

HM 225
3/4” x 3”
O A C M P

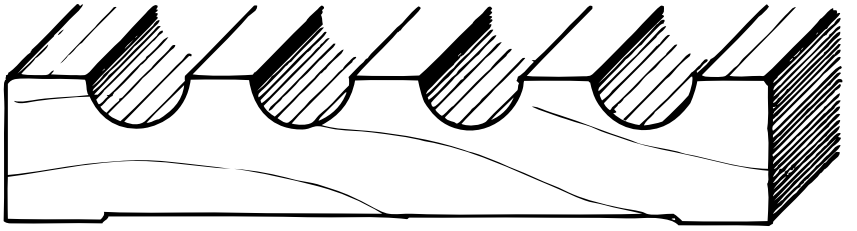

HM 226
3/4” x 4”
O P

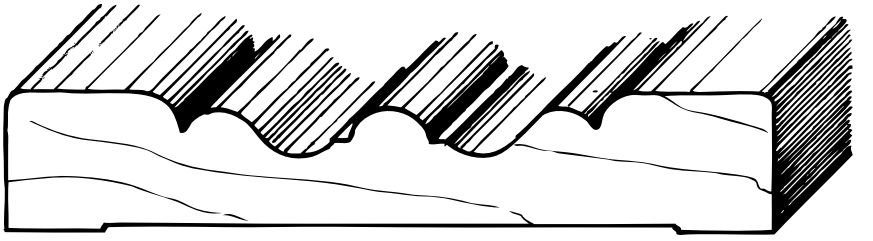

HM 234
3/4” x 4”
O KA P

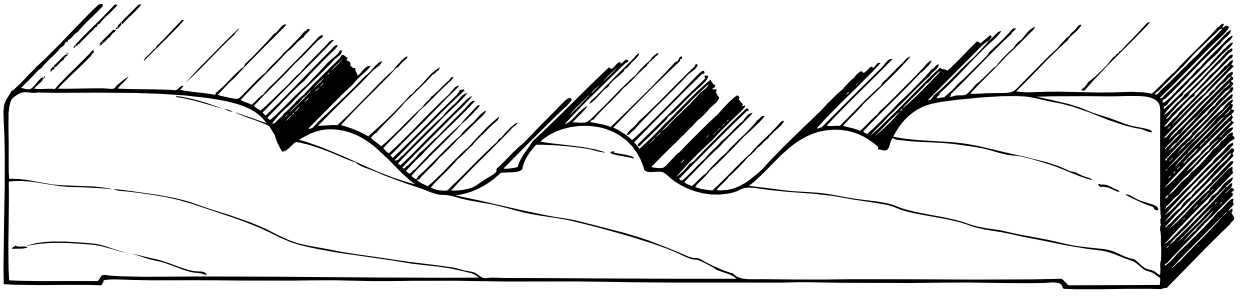

HM 236
1” x 6”
O KA M P

LEGEND: **O**=Oak, **A**=Alder, **KA**=Knotty Alder, **P**=Poplar, **C**=Cherry, **M**=Maple, **SM**=Soft Maple, **H**=Hickory

(FOR ADDITIONAL CUSTOM CASING SEE PP. 29-32)

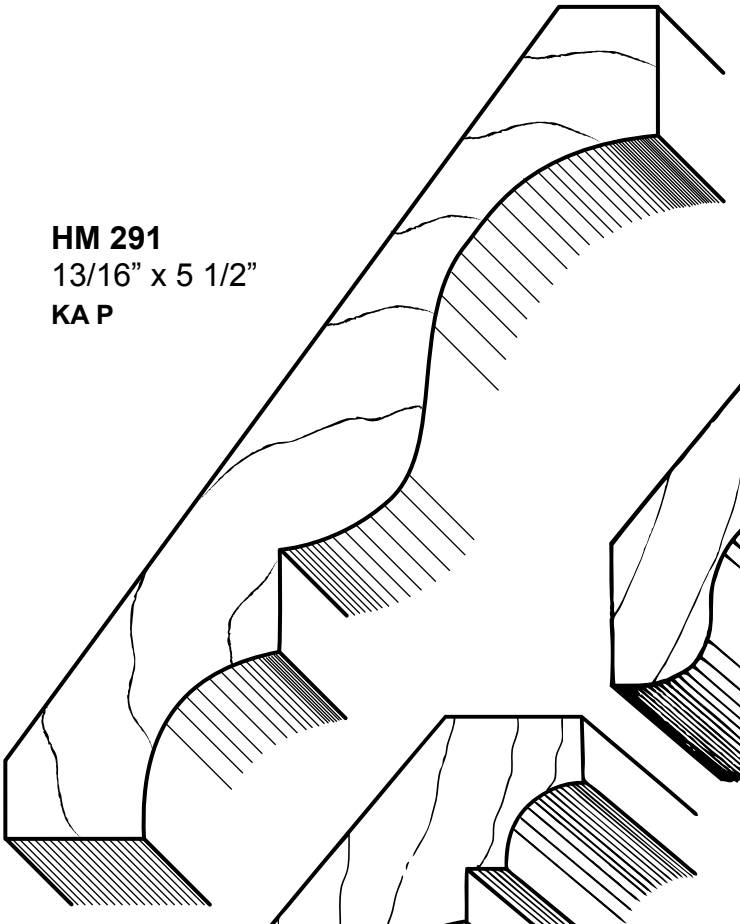

HM 291
13/16” x 5 1/2”
KA P

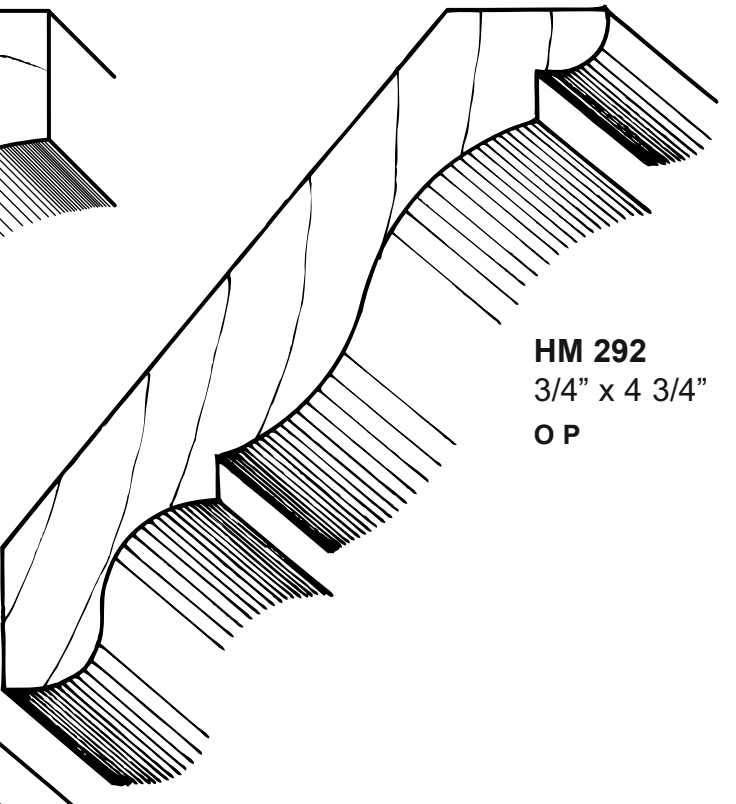

HM 292
3/4” x 4 3/4”
O P

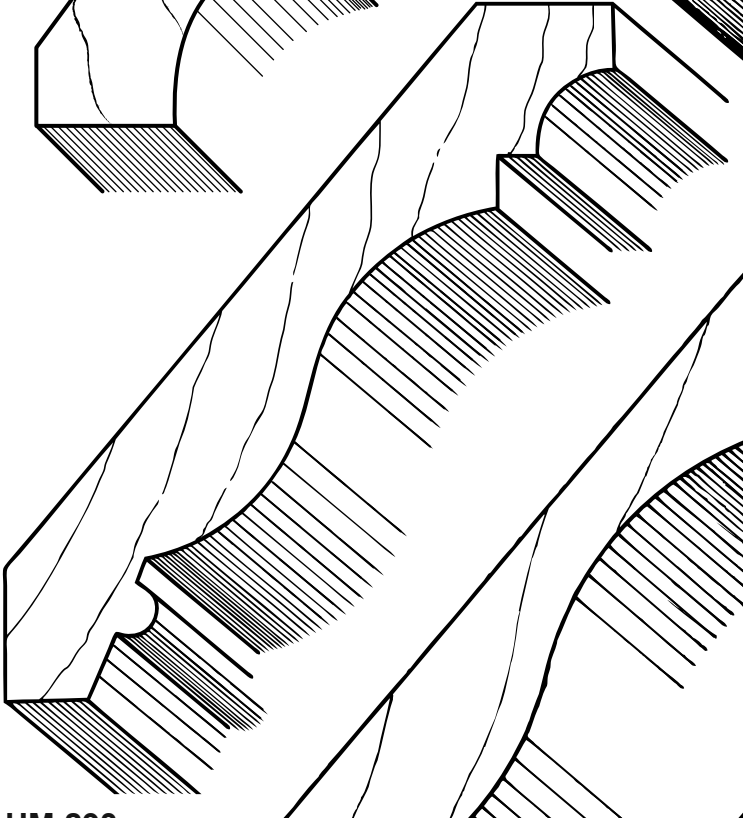

HM 293
3/4” x 4 13/16”
O P

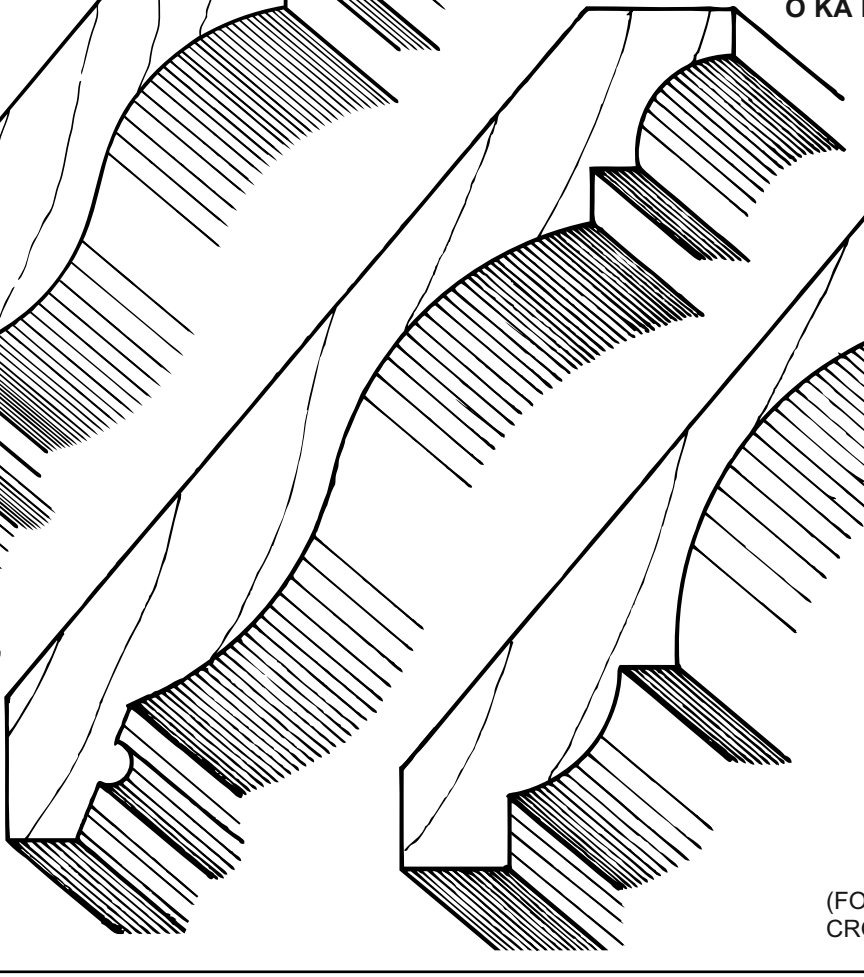

HM 295
3/4” x 5 3/4”
O KA P

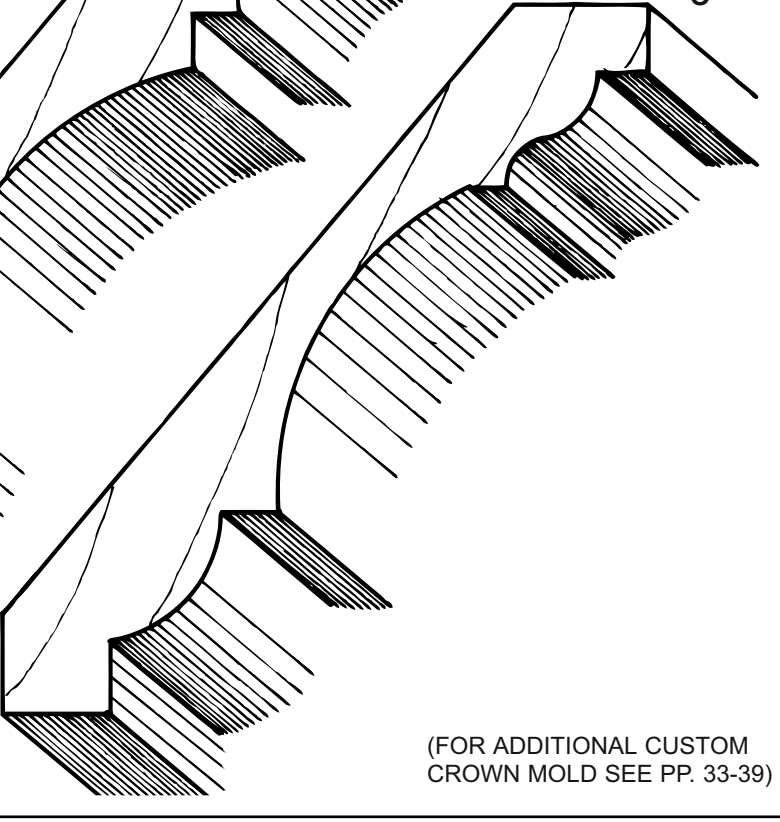

HM 296
3/4” x 5”
O

(FOR ADDITIONAL CUSTOM CROWN MOLD SEE PP. 33-39)

CROWN MOLD AND DENTIL MOLD

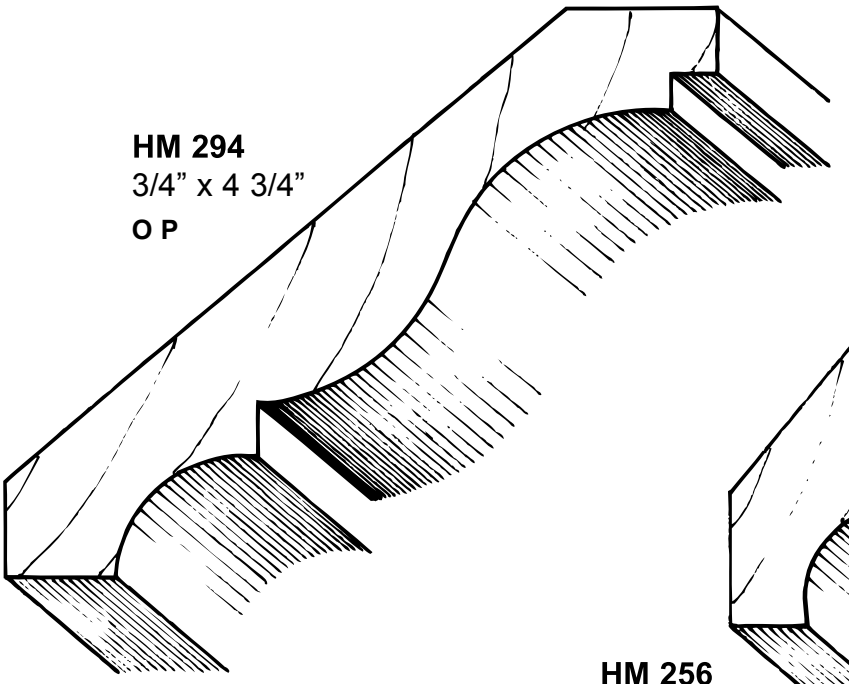

HM 294
3/4” x 4 3/4”
O P

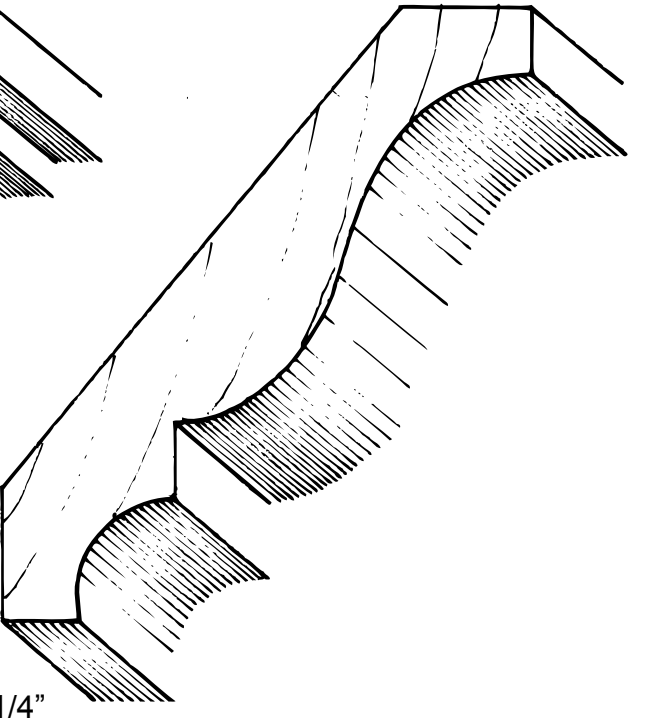

HM 256
3/4” x 4 1/4”
O A C KA M P

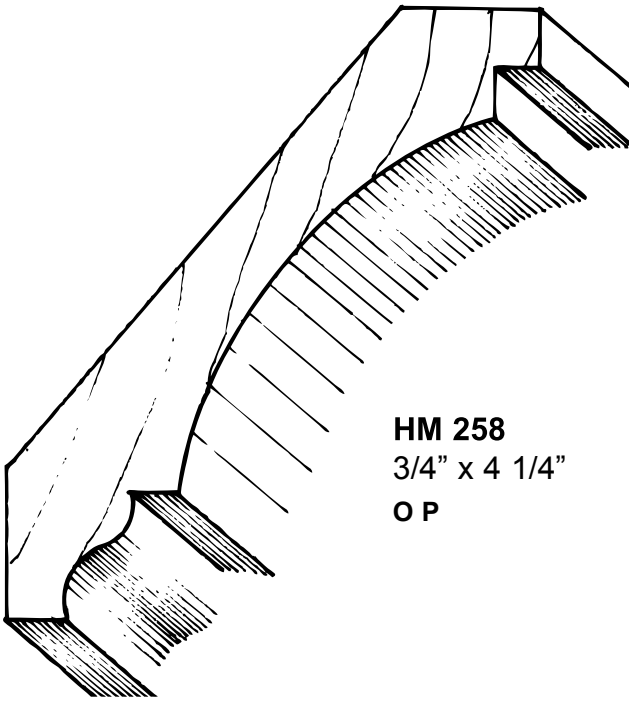

HM 258
3/4” x 4 1/4”
O P

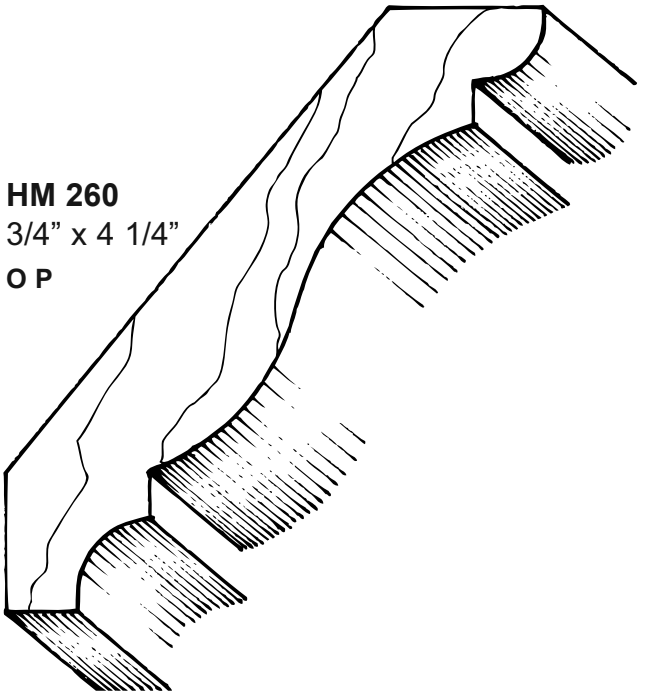

HM 260
3/4” x 4 1/4”
O P

CROWN MOLD

(FOR ADDITIONAL CUSTOM
CROWN MOLD SEE PP. 33-39)

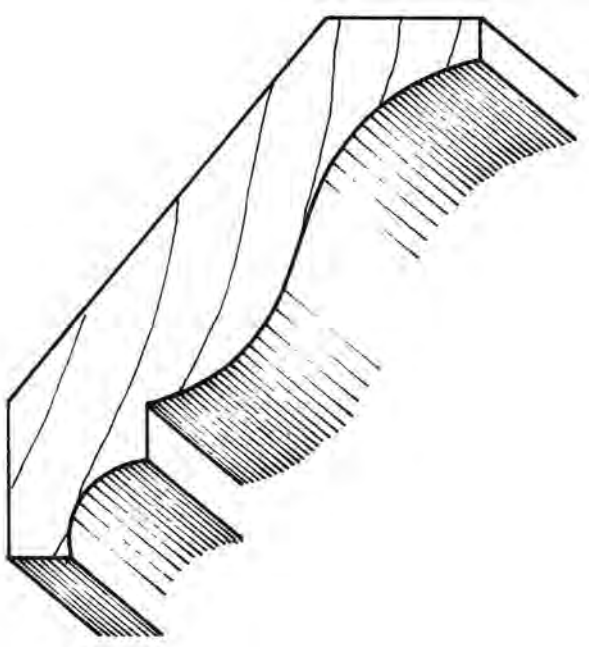

HM 262
3/4” x 3 3/4”
O A C M P

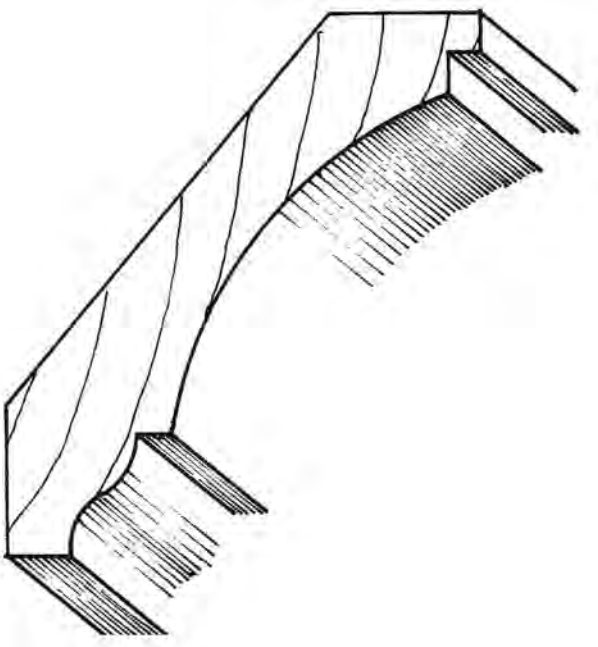

HM 264
3/4” x 3 3/4”
O

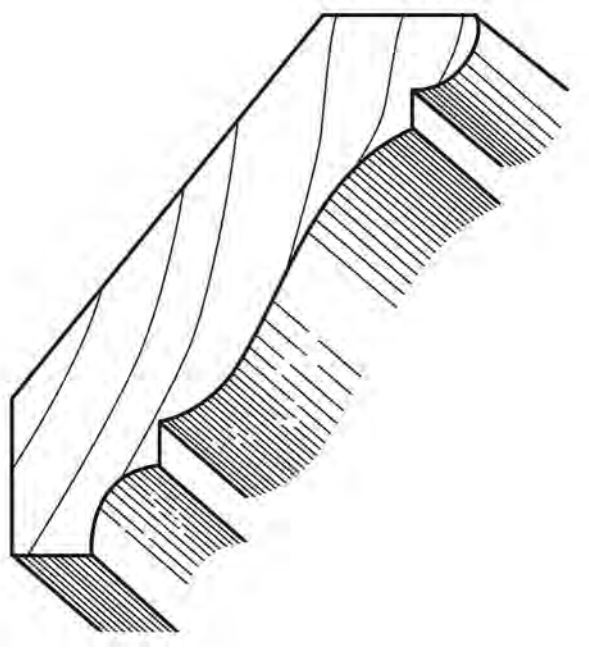

HM 266
3/4” x 3 3/4”
O

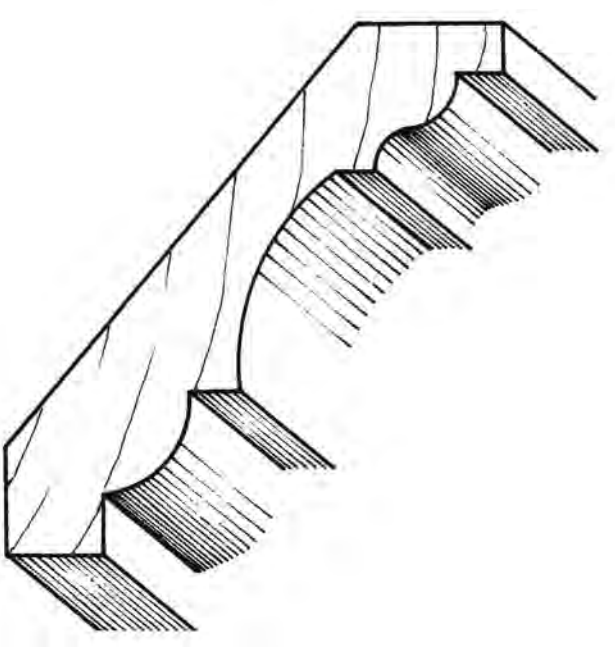

HM 297
3/4” x 3 3/4”
O P

LEGEND: **O**=Oak, **A**=Alder, **KA**=Knotty Alder, **P**=Poplar, **C**=Cherry, **M**=Maple, **SM**=Soft Maple, **H**=Hickory

(FOR ADDITIONAL CUSTOM CROWN MOLD SEE PP. 33-39)

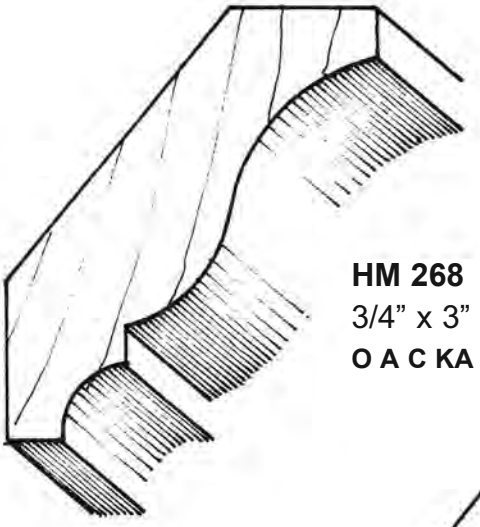

HM 268
3/4” x 3”
O A C KA M P H

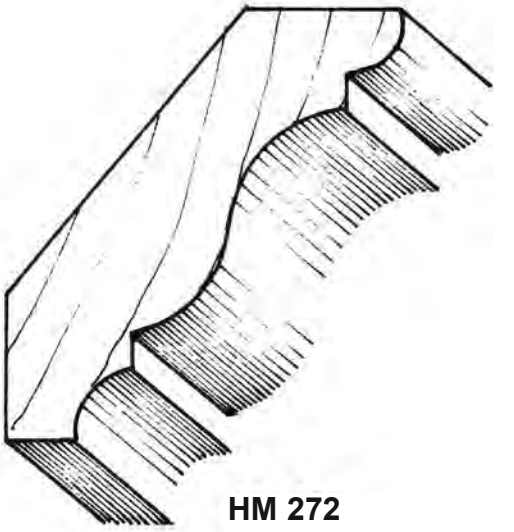

HM 272
3/4” x 3”
O P

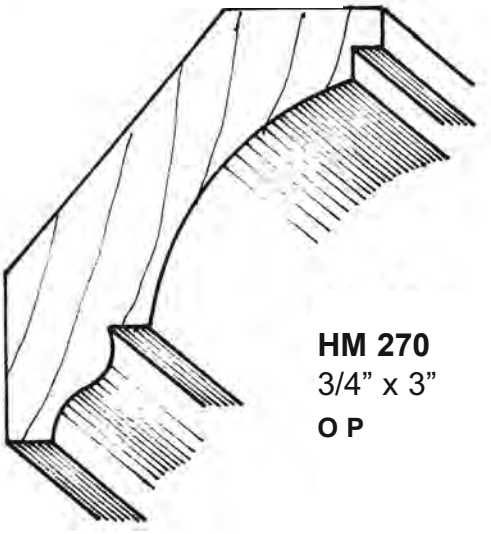

HM 270
3/4” x 3”
O P

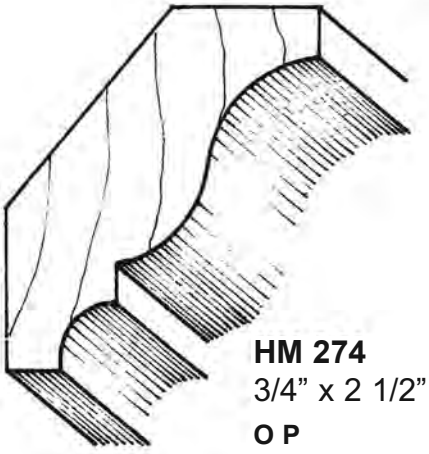

HM 274
3/4” x 2 1/2”
O P

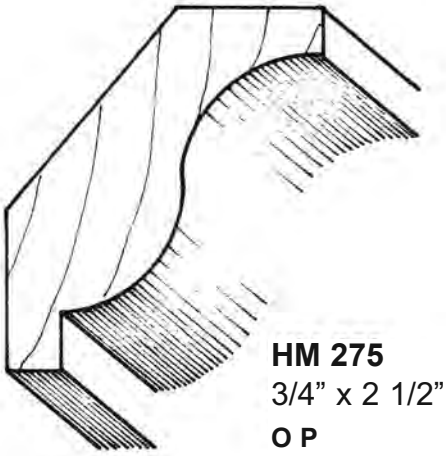

HM 275
3/4” x 2 1/2”
O P

(FOR ADDITIONAL CUSTOM CROWN MOLD SEE PP. 33-39)

LEGEND: **O**=Oak, **A**=Alder, **KA**=Knotty Alder, **P**=Poplar, **C**=Cherry, **M**=Maple, **SM**=Soft Maple, **H**=Hickory

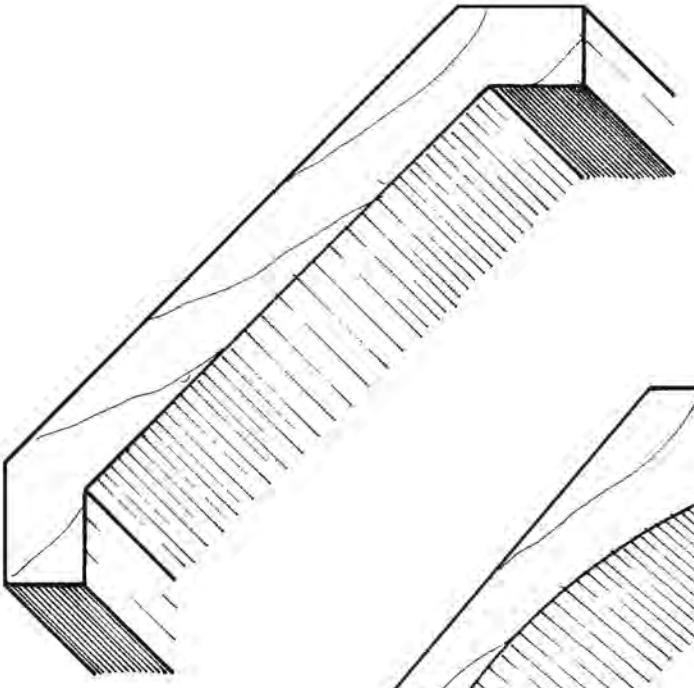

HM 1250
3/4” x 4 1/4”
KA P

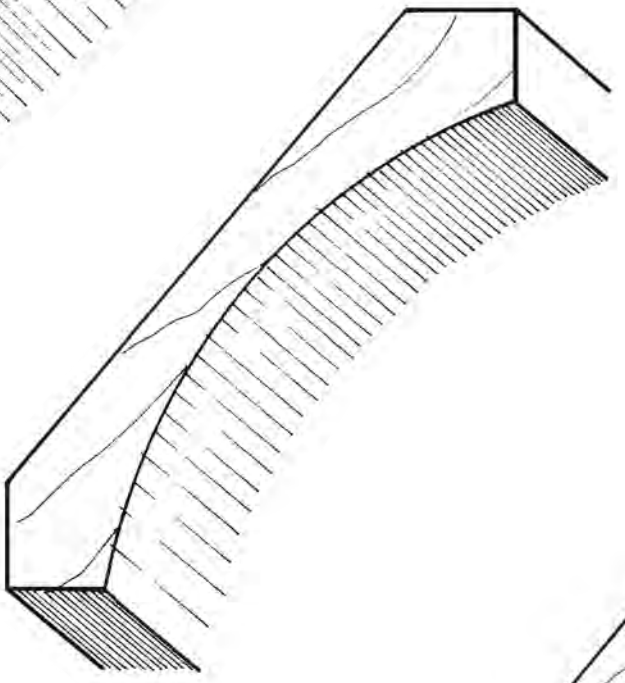

HM 1254
3/4” x 4”
KA P

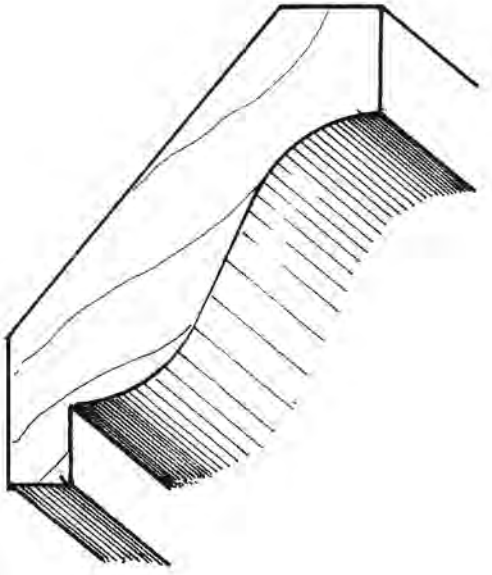

HM 1261
3/4” x 3 1/8”
P

(FOR ADDITIONAL CUSTOM CROWN MOLD SEE PP. 33-39)

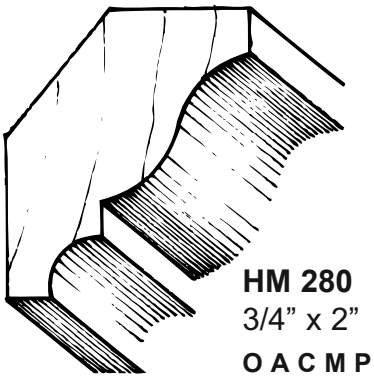

HM 280
3/4” x 2”
O A C M P

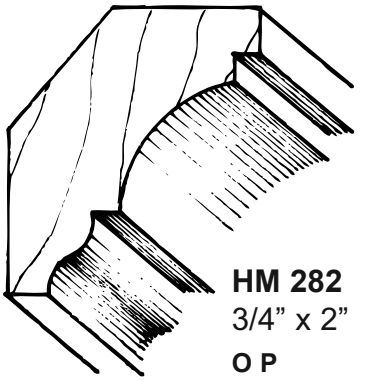

HM 282
3/4” x 2”
O P

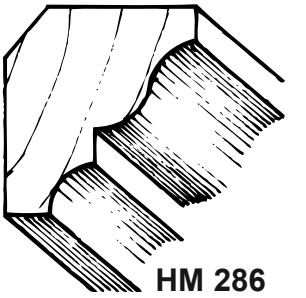

HM 286
3/4” x 1 1/2”
O

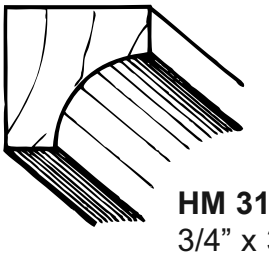

HM 312
3/4” x 3/4”
O A M P

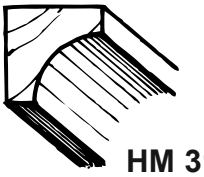

HM 313
1/2” x 1/2”
O A M P

HM 314
5/8” x 5/8”
O A C M P

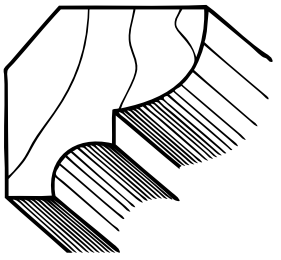

HM 356
3/4” x 1 1/2”
O A P

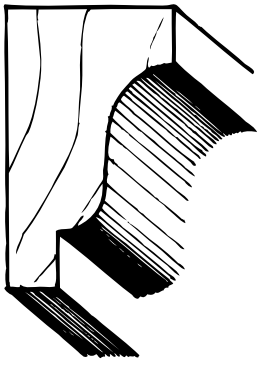

HM 360
7/8” x 1 1/2”
O P A

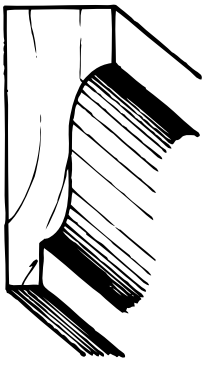

HM 361
9/16” x 1 1/2”
O A

LEGEND: **O**=Oak, **A**=Alder, **KA**=Knotty Alder, **P**=Poplar, **C**=Cherry, **M**=Maple, **SM**=Soft Maple, **H**=Hickory

(FOR ADDITIONAL CUSTOM CROWN MOLD SEE PP. 33-39)

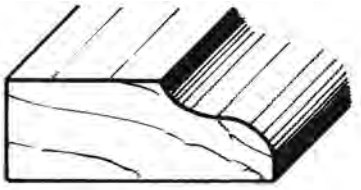

HM 405 1/2” x 1 3/8”
O

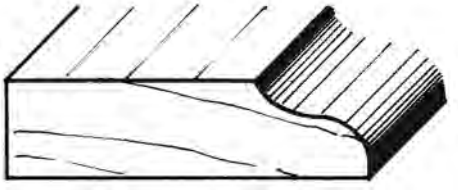

HM 407 1/2” x 1 7/8”
O

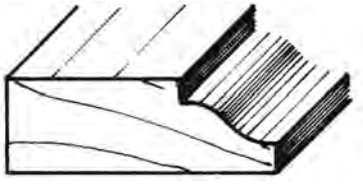

HM 409 1/2” x 1 3/8”
O P

HM 410 1/2” x 1 5/8”
O A M P

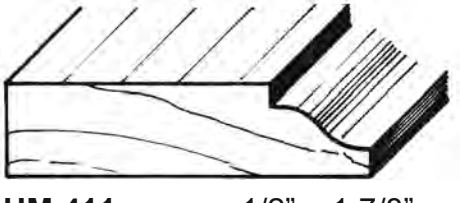

HM 411 1/2” x 1 7/8”
O

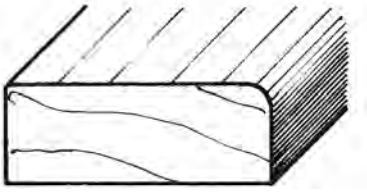

HM 412 1/2” x 1 3/8”
O A M P

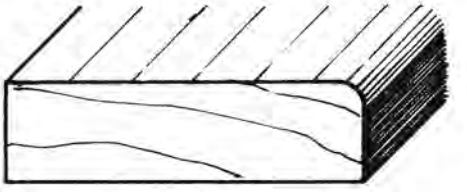

HM 414 1/2” x 1 7/8”
O P

HM 415 1/2” x 1/2”
O

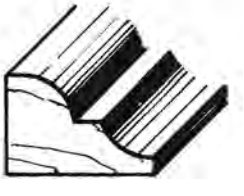

HM 416 1/2” x 3/4”
O A C P M

HM 417 5/8” x 5/8”
O P

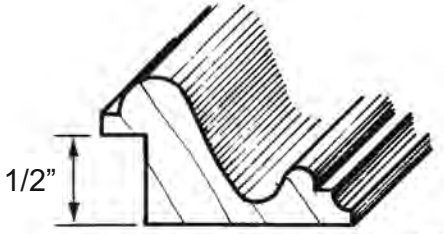

HM 450 13/16” x 1 3/8”
O A M P

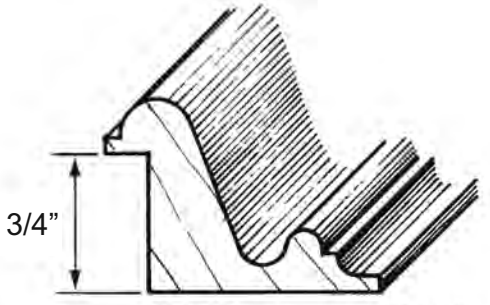

HM 451 1 1/16” x 1 1/2”
O A M P

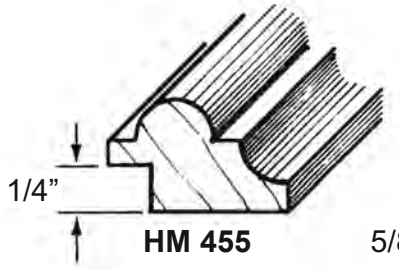

HM 455 5/8” x 1”
O P A

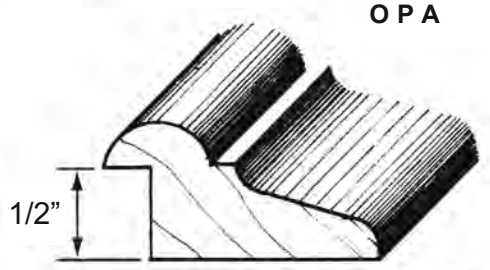

HM 456 3/4” x 1 1/2”
O A P

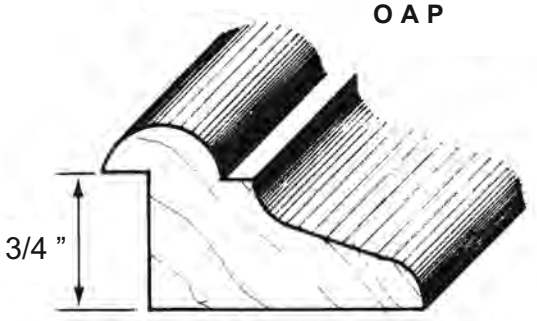

HM 473 1” x 1 3/4”
O A P

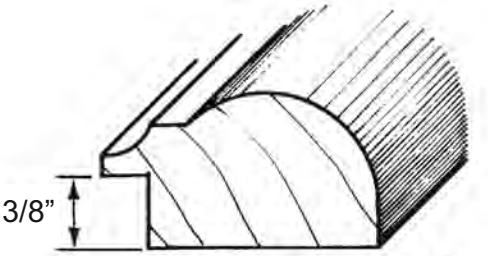

HM 457 13/16” x 1 1/2”
O P

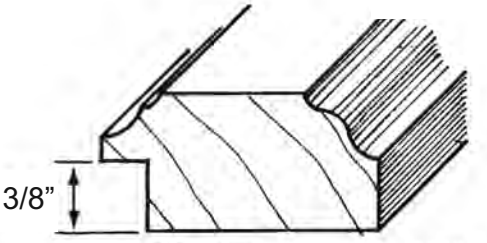

HM 458 3/4” x 1 1/2”
O

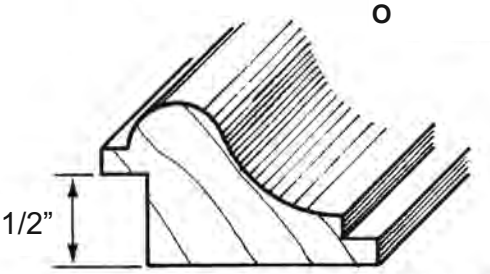

HM 470 7/8” x 1 1/2”
O P

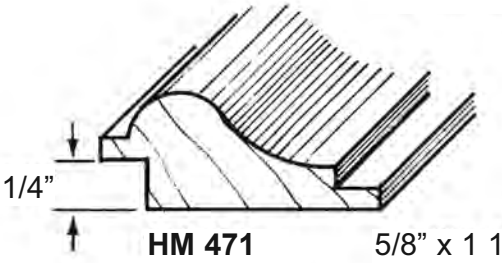

HM 471 5/8” x 1 1/2”
O A P

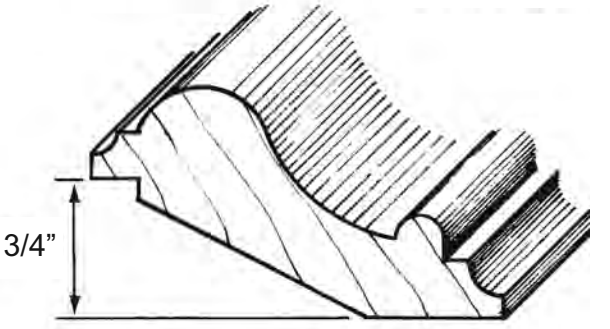

HM 472 1 1/4” x 2 1/4”
O P

LEGEND: **O**=Oak, **A**=Alder, **KA**=Knotty Alder, **P**=Poplar, **C**=Cherry, **M**=Maple, **SM**=Soft Maple, **H**=Hickory

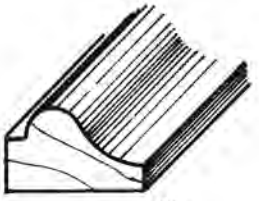

HM 500
7/16” x 3/4”
O A P

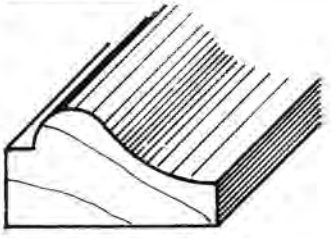

HM 501
5/8” x 1 1/8”
O A P

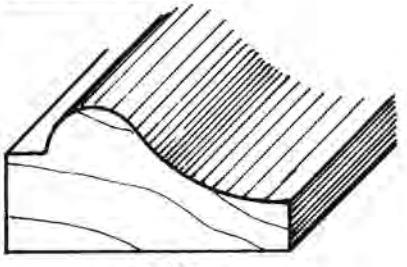

HM 502
3/4” x 1 1/2”
O A M P

HM 503
3/8” x 3/4”
O A M P

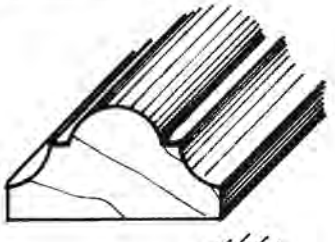

HM 515
9/16” x 1 1/8”
O A P

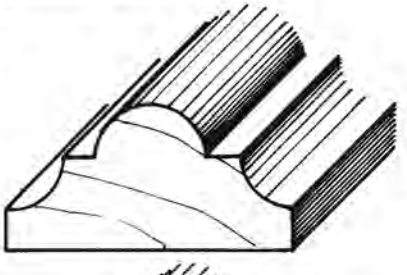

HM 504
3/4” x 1 1/2”
O A P

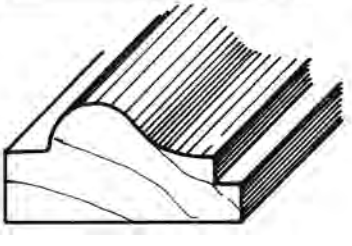

HM 505
5/8” x 1 1/4”
O P

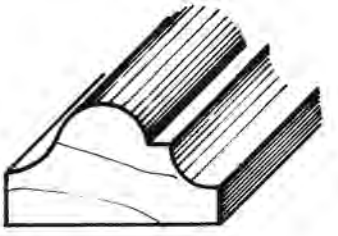

HM 507
5/8” x 1 1/8”
O P

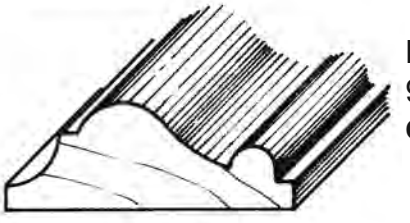

HM 516
9/16” x 1 1/2”
O P

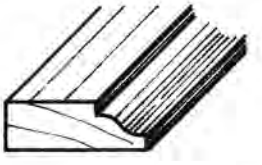

HM 510
1/4” x 3/4”
O P A

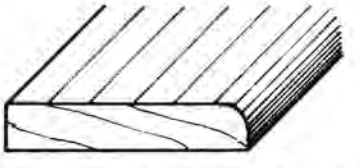

HM 511
1/4” x 1 1/4”
O A M

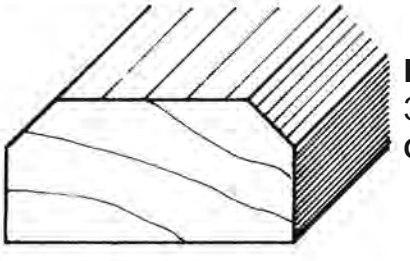

HM 512
3/4” x 1 1/2”
O

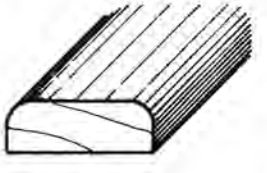

HM 513
1/4” x 3/4”
O P A

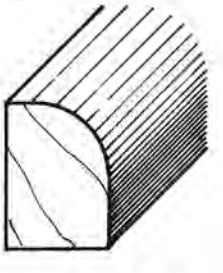

HM 514
1/2” x 3/4”
O A M P

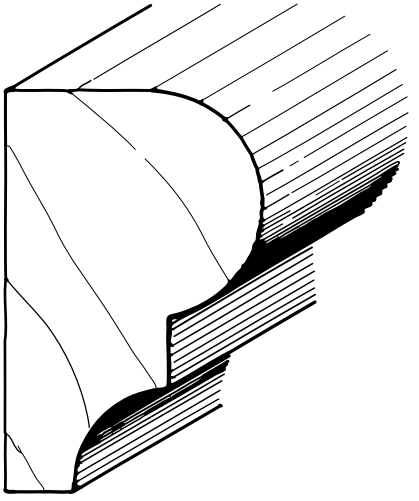

HM 600
2 1/8” x 1 3/8”
O P KA

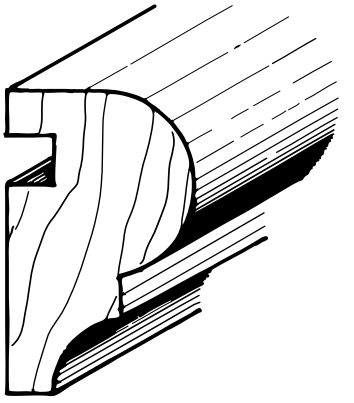

HM 601
1 5/8” x 1”
O A C M P

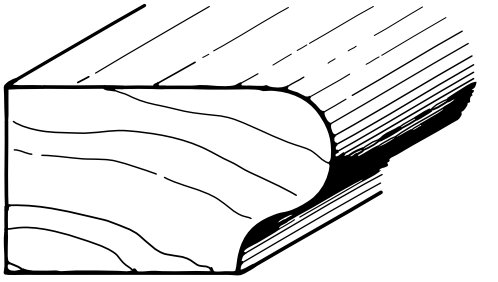

HM 602
1” x 1 3/4”
O A P

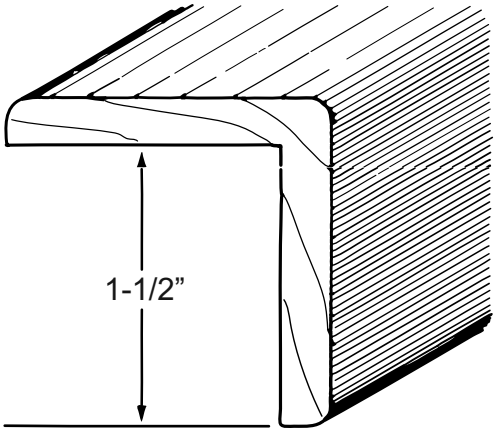

HM 610
1 3/4” x 1 3/4”
O P

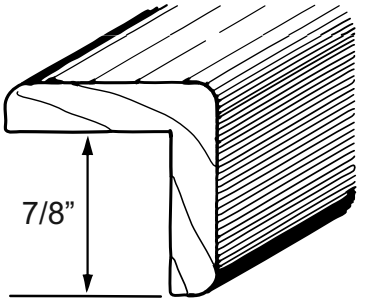

HM 604
1 1/8” x 1 1/8”
O M P A

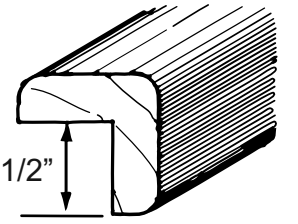

HM 608
3/4” x 3/4”
O P

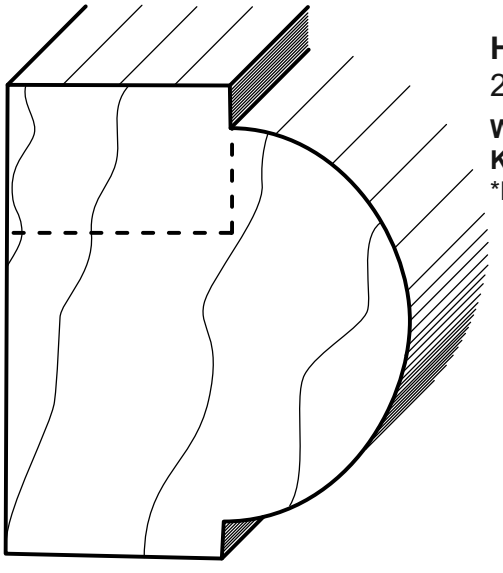

HM 371
2 1/2” x 2 3/16”
WINDOW STOOL
KA P
*Rabbet Optional

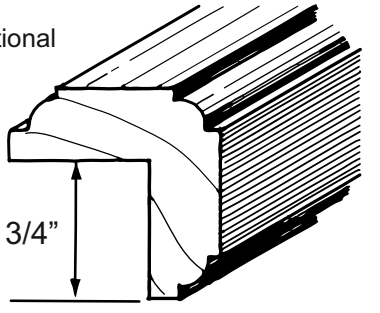

HM 605
1 1/8” x 1 1/8”
O P

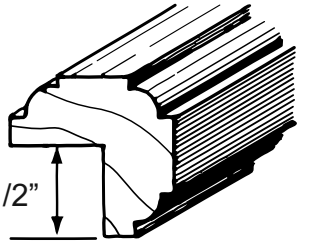

HM 607
7/8” x 7/8”
O P

LEGEND: **O**=Oak, **A**=Alder, **KA**=Knotty Alder, **P**=Poplar, **C**=Cherry, **M**=Maple, **SM**=Soft Maple, **H**=Hickory

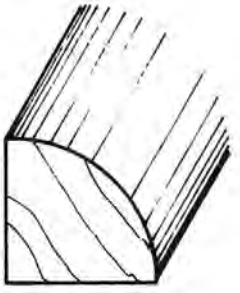

HM 652
3/4” x 3/4”
O P A

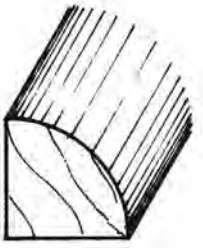

HM 653
5/8” x 5/8”
O P A

HM 654
1/2” x 1/2”
O P A

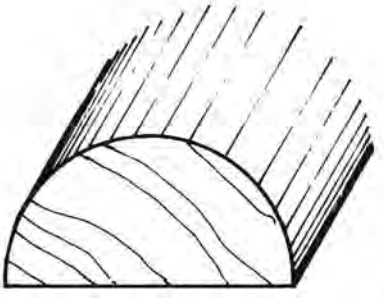

HM 670
3/4” x 1 1/2”
O P

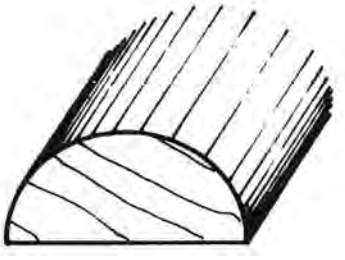

HM 671
5/8” x 1 1/4”
O

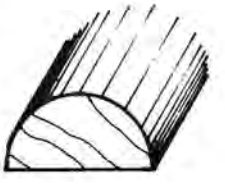

HM 672
3/8” x 3/4”
O

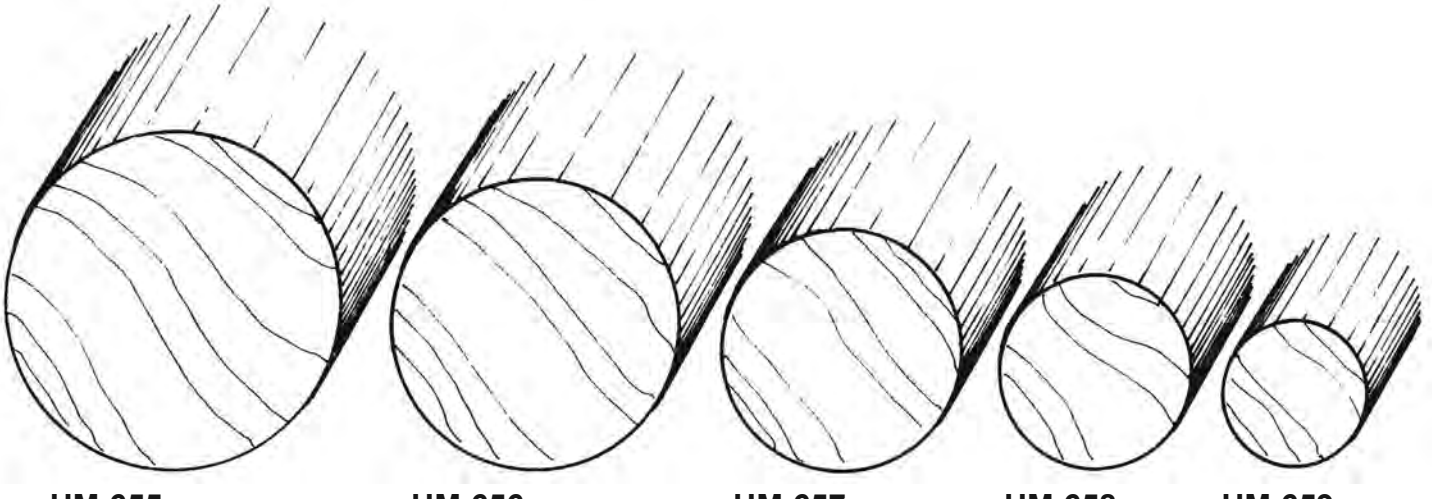

HM 655
1 3/4” Diameter
O M P

HM 656
1 1/2” Diameter
O

HM 657
1 1/4” Diameter
O

HM 658
1” Diameter
O P

HM 659
3/4” Diameter
O

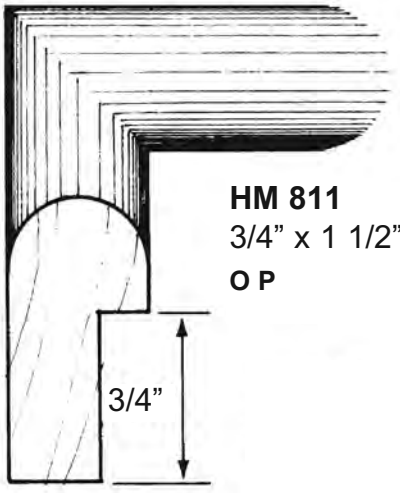

HM 811
3/4” x 1 1/2”
O P

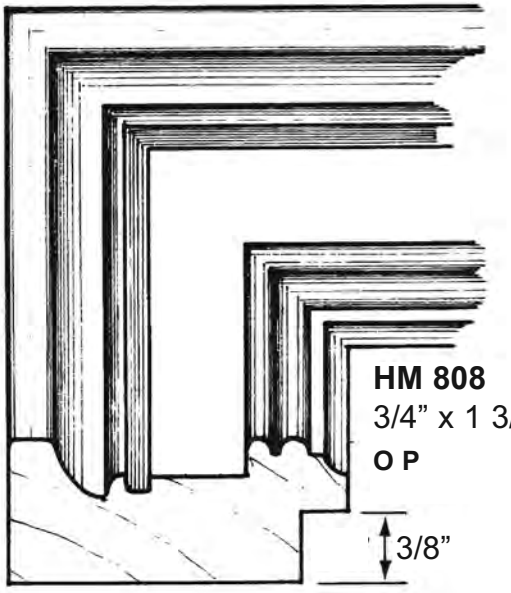

HM 808
3/4” x 1 3/4”
O P

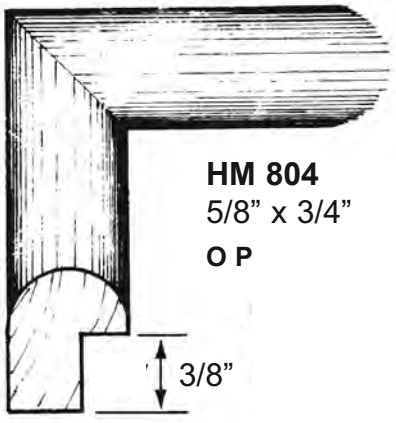

HM 804
5/8” x 3/4”
O P

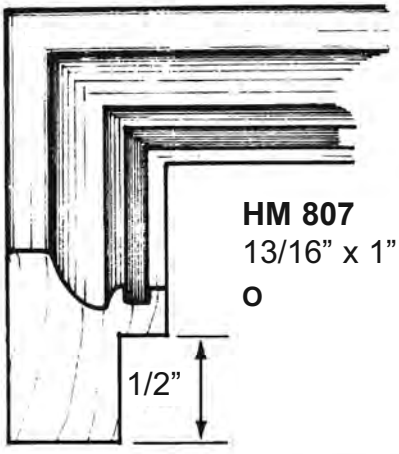

HM 807
13/16” x 1”
O

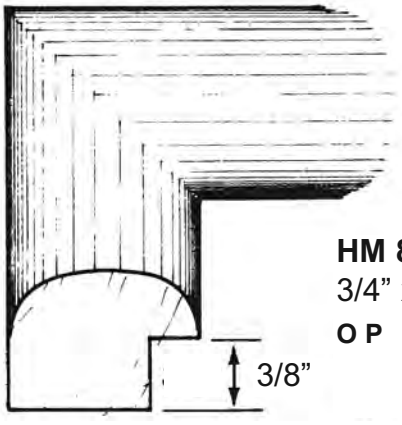

HM 805
3/4” x 1”
O P

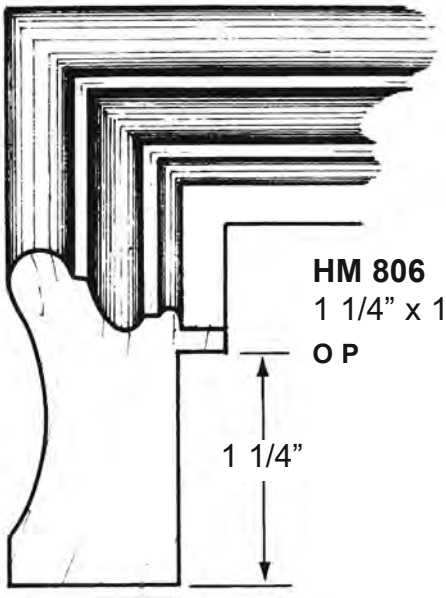

HM 806
1 1/4” x 1 3/4”
O P

LEGEND: **O**=Oak, **A**=Alder, **KA**=Knotty Alder, **P**=Poplar, **C**=Cherry, **M**=Maple, **SM**=Soft Maple, **H**=Hickory

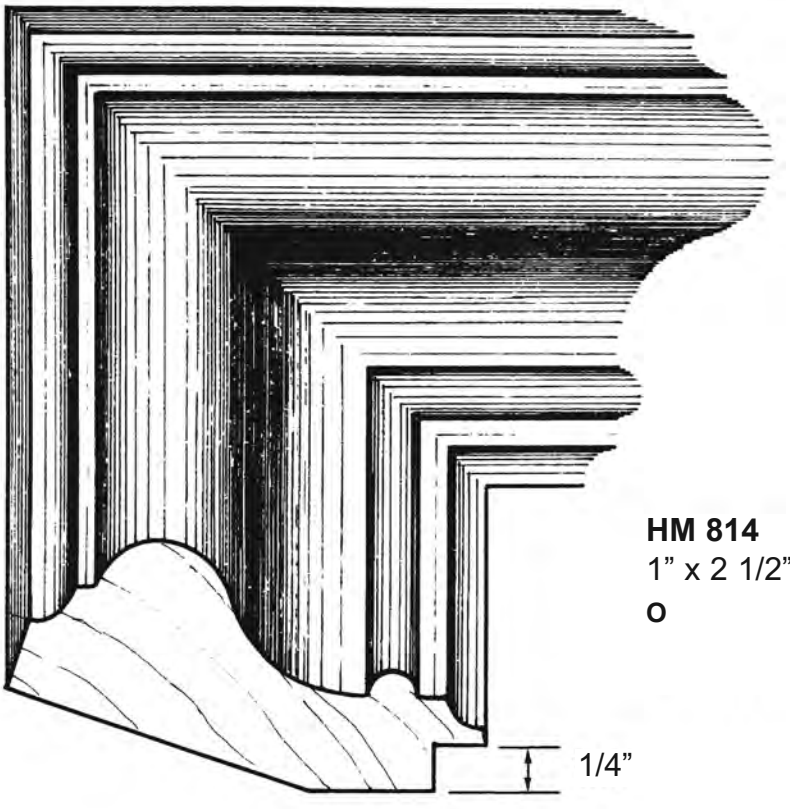

HM 814
1” x 2 1/2”
O

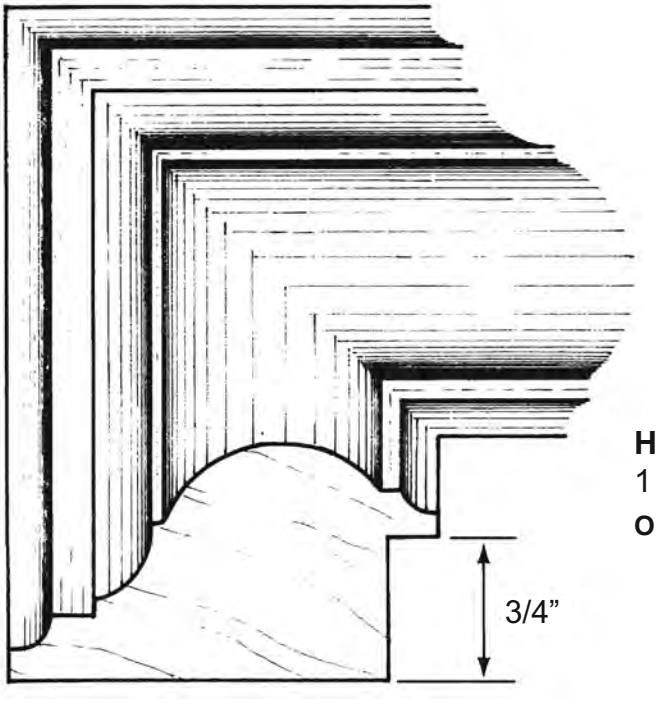

HM 815
1 1/4” x 2 1/4”
O P

STOCK SIZES AVAILABLE

23150
3/4” x 1 1/2” (1 x 2)
O P M

23250
3/4” x 2 1/2” (1 x 3)
O P

23350
3/4” x 3 1/2” (1 x 4)
O P M A KA C

23450
3/4” x 4 1/2” (1 x 5)
O P

23550
3/4” x 5 1/2” (1 x 6)
O P A KA C M

23750
3/4” x 7 1/4” (1 x 8)
O P M A KA C

23950
3/4” x 9 1/4” (1 x 10)
O A KA P

231150
3/4” x 11 1/4” (1 x 12)
O P M A KA

(OTHER SIZES AVAILABLE BY SPECIAL ORDER)

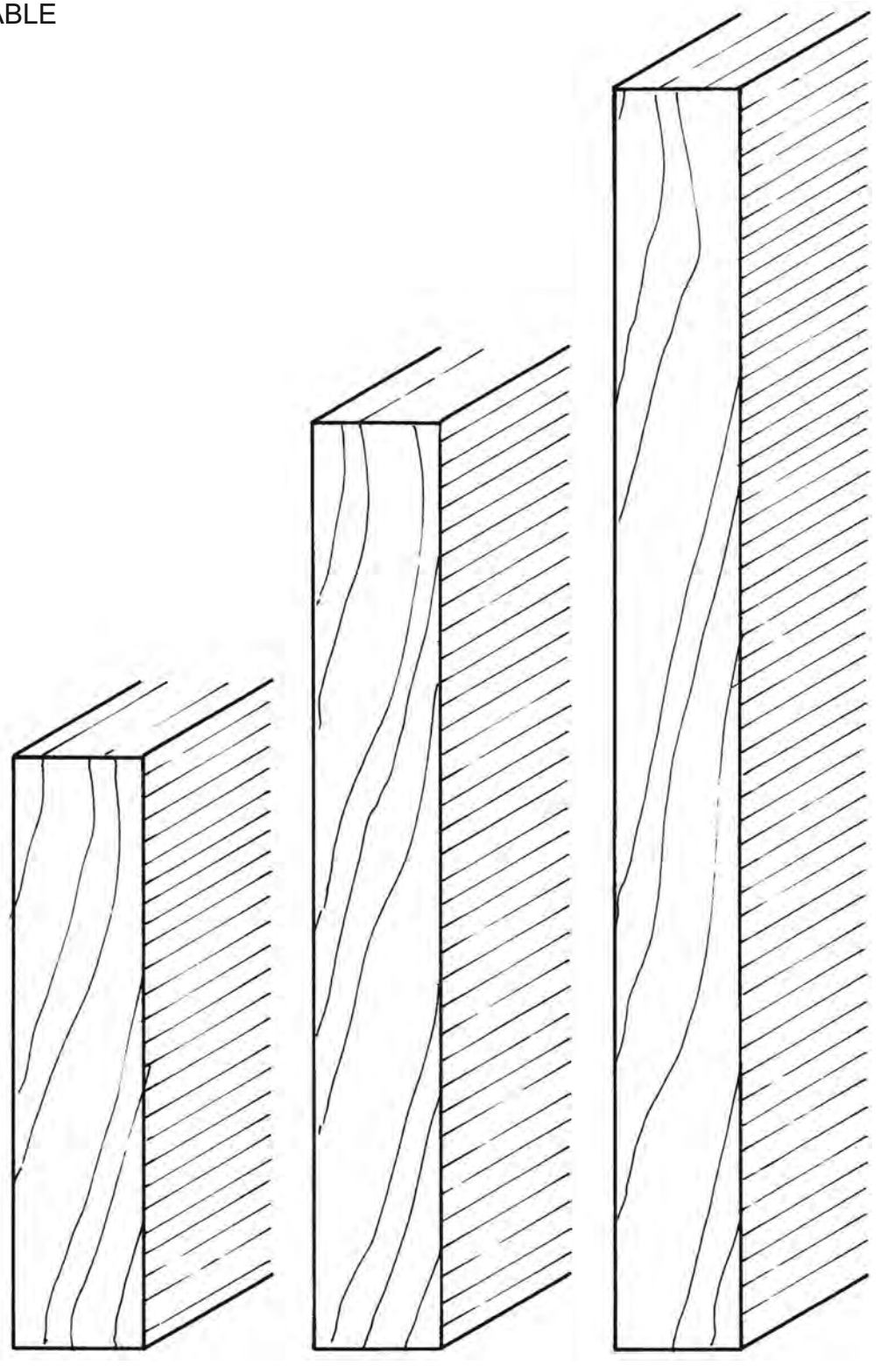

LEGEND: **O**=Oak, **A**=Alder, **KA**=Knotty Alder, **P**=Poplar, **C**=Cherry, **M**=Maple, **SM**=Soft Maple, **H**=Hickory

HM 606
1 1/4" x 2 3/8" x 8' length
O A C M P

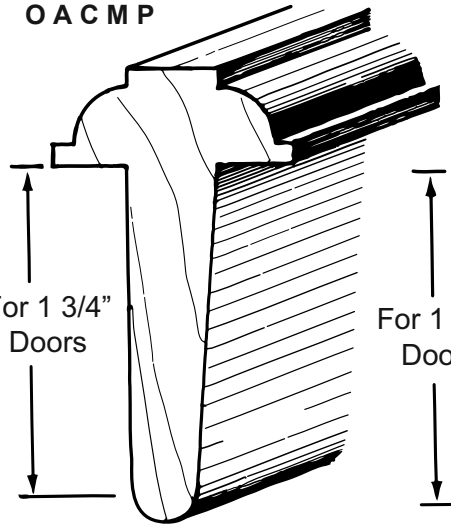

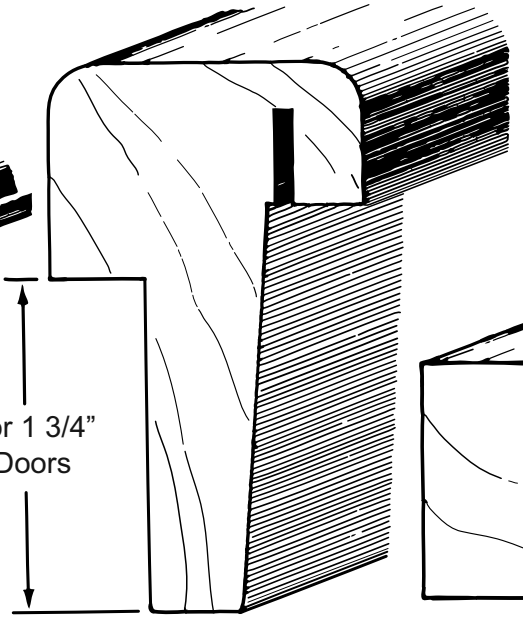

HM 609
1 5/8" x 2 7/8" x 8' length
WITH KERF FOR WEATHERSTRIP
A C M O

BRICK MOLD
1 1/4" x 2 1/4"
O A P

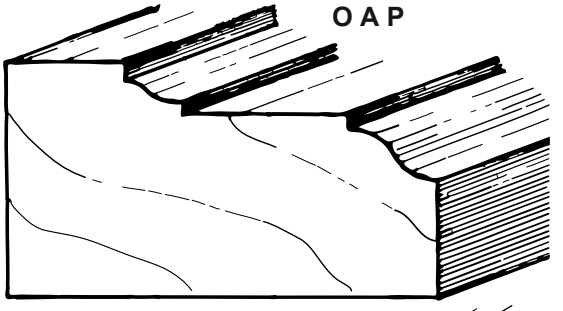

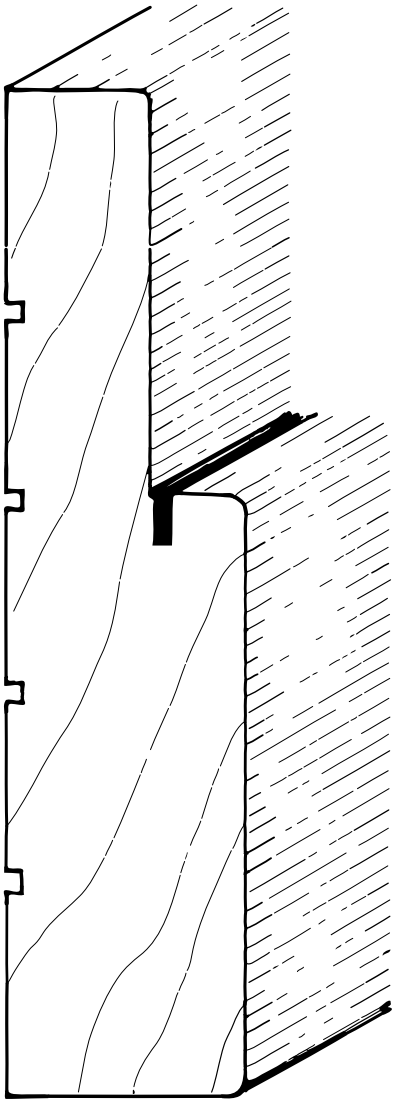

EXTERIOR DOOR JAMB
(w/ kerf for weatherstrip)
1 1/4" x 6 5/8" **A O P KA**

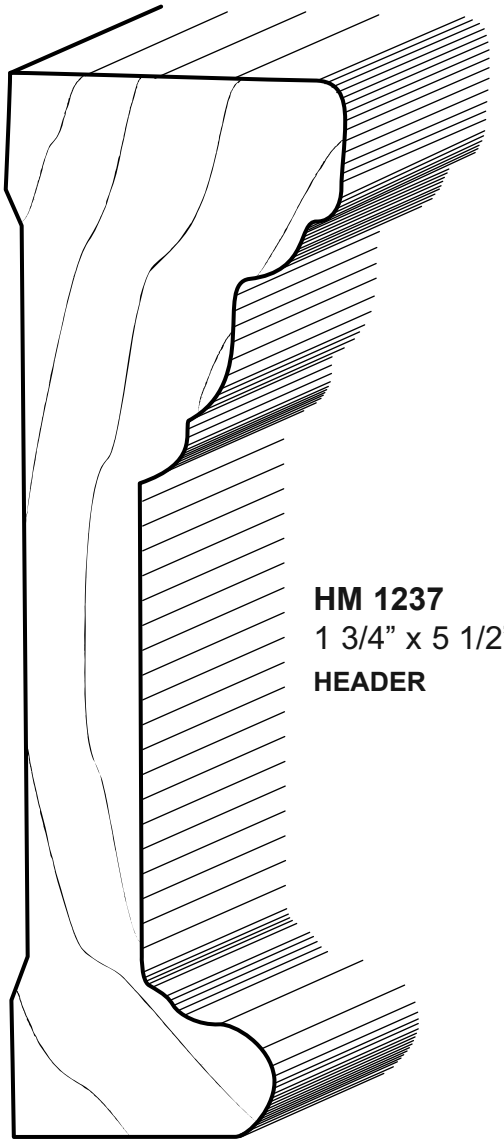

HM 1237
1 3/4" x 5 1/2"
HEADER

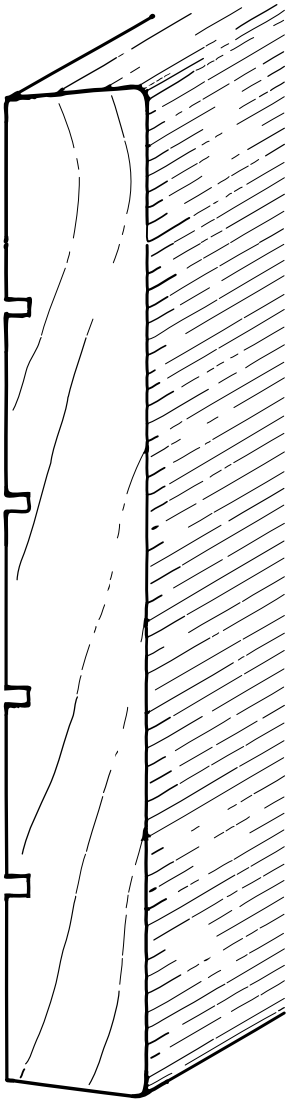

INTERIOR DOOR JAMB

3/4" x 4 5/8"	**A M O P KA**
3/4" x 4 7/8"	**A O KA P**
3/4" x 6 7/8"	**P**

CUSTOM AND SPECIAL ORDER SECTION

The following pages represent some of the custom profiles we produce. We are also able to match profiles for restoration and create profiles of your design.

Custom orders are non-returnable, and require a non-refundable deposit and set-up fee. All Custom Knives will remain in the possession of Huetter Mill & Cabinet for future use.

Custom radius casing, chair rail, base and crown can be ordered to match many of our profiles.

Please call our Customer Service department for quotes on these items as well as all of your custom woodworking needs.

Telephone us at 801-266-3222 or toll free 800-246-3225 or fax your needs to 801-263-0425. Thank you.

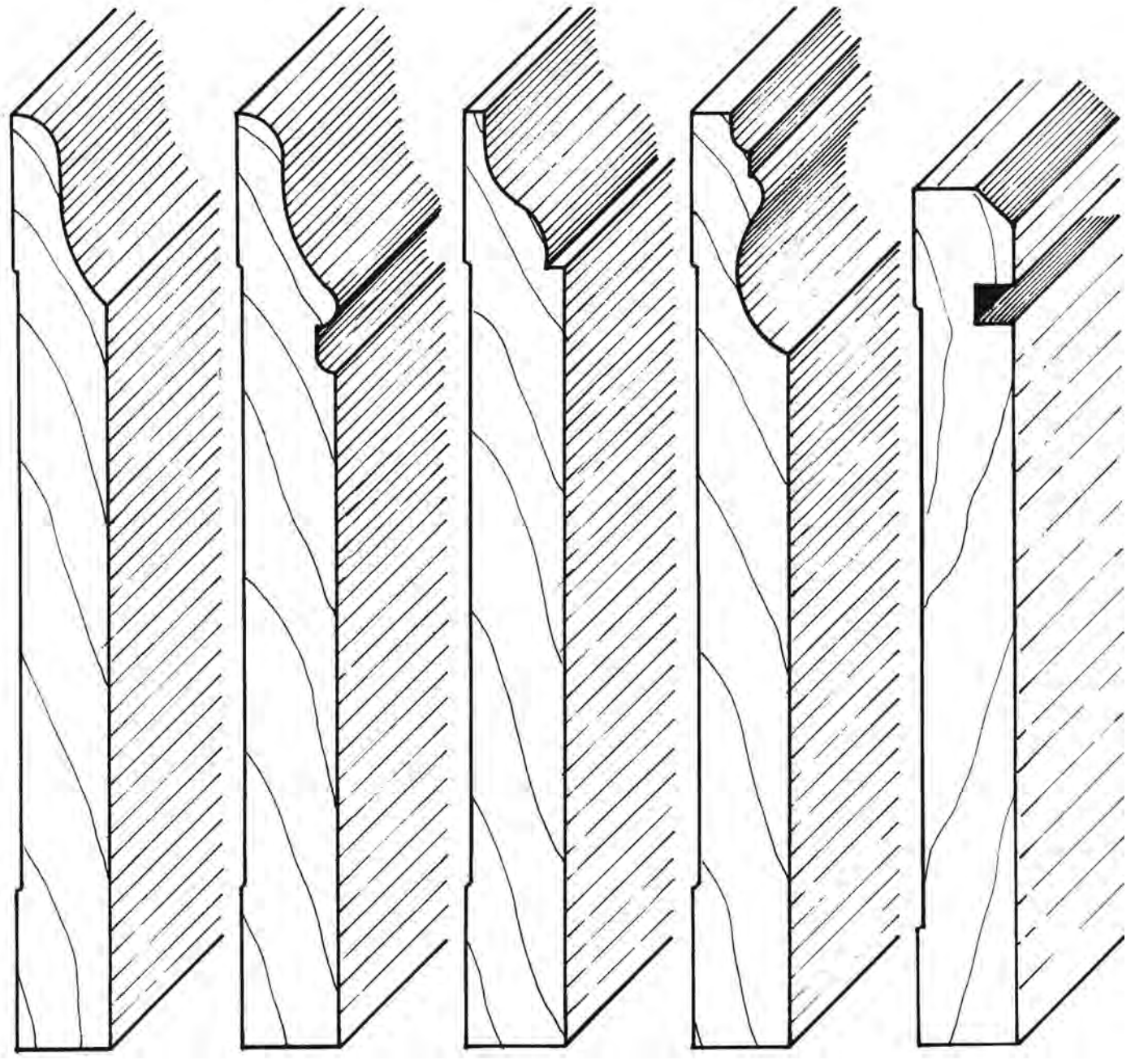

HM 105
5/8” x 6”

HM 107
5/8” x 6”

HM 109
5/8” x 6”

HM 133
5/8” x 6”

HM 1108
5/8” x 5 1/2”

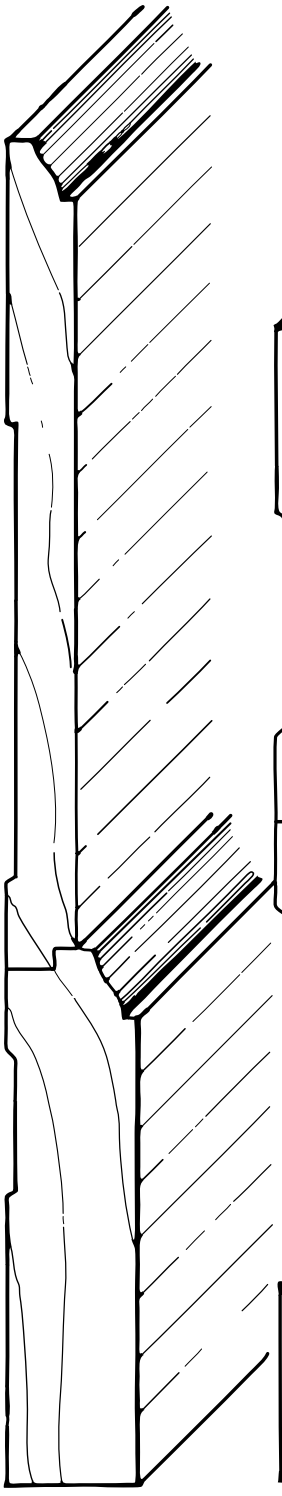

HM 1101
5/8” x Variable
Up to 11 1/2”

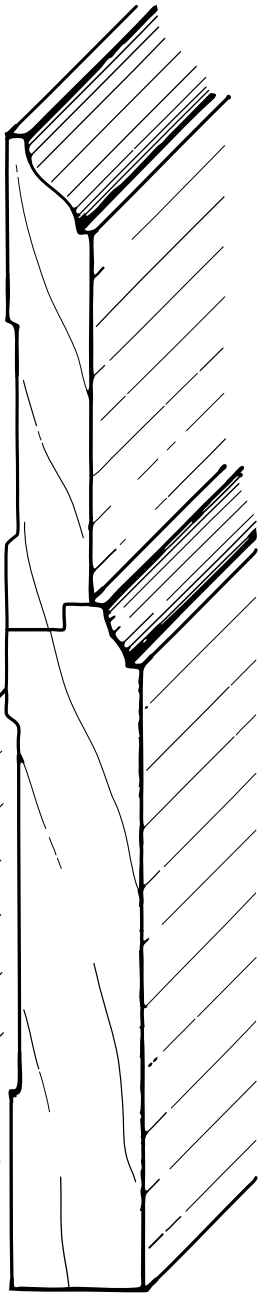

HM 1102
5/8” x Variable
Up to 11 1/2”

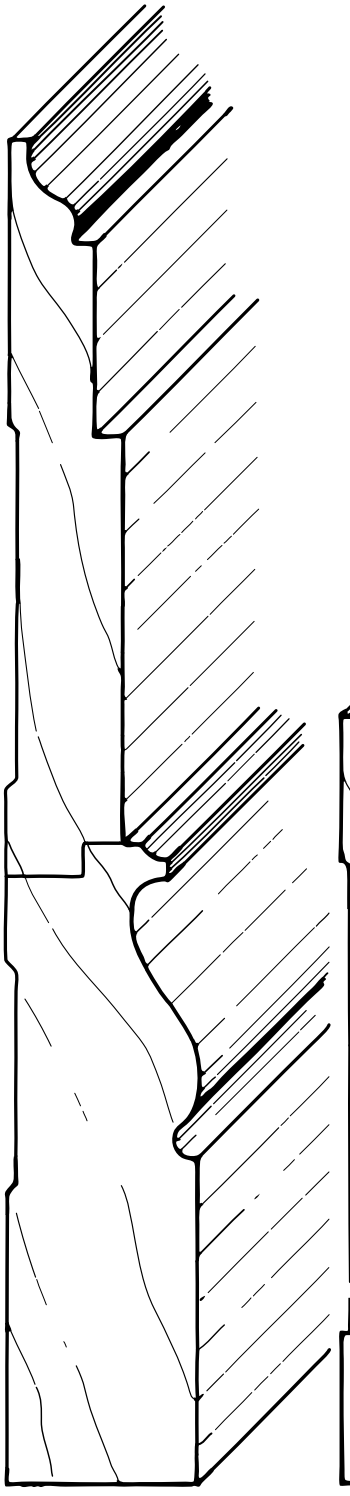

HM 1103
1” x Variable
Up to 11 1/2”

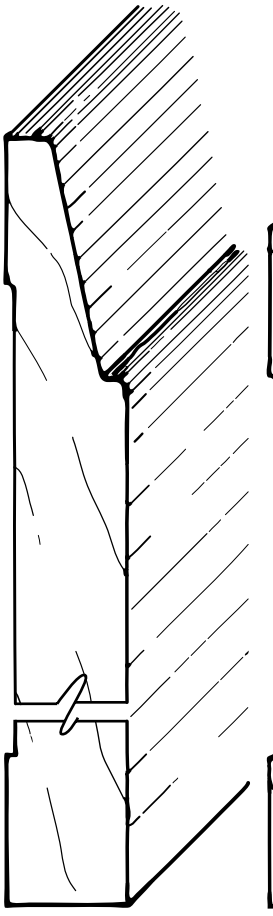

HM 1104
5/8” x Variable
Up to 11 1/2”

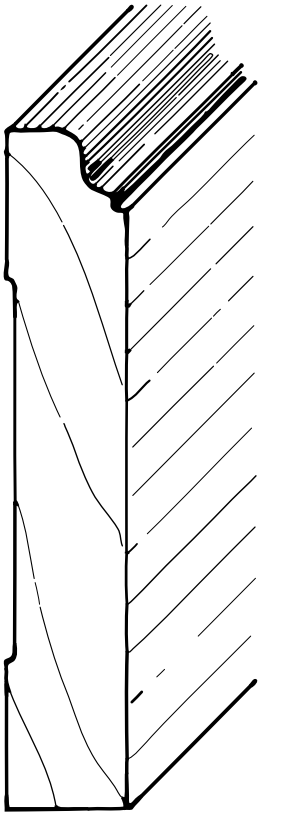

HM 1105
5/8” x Variable
Up to 11 1/2”

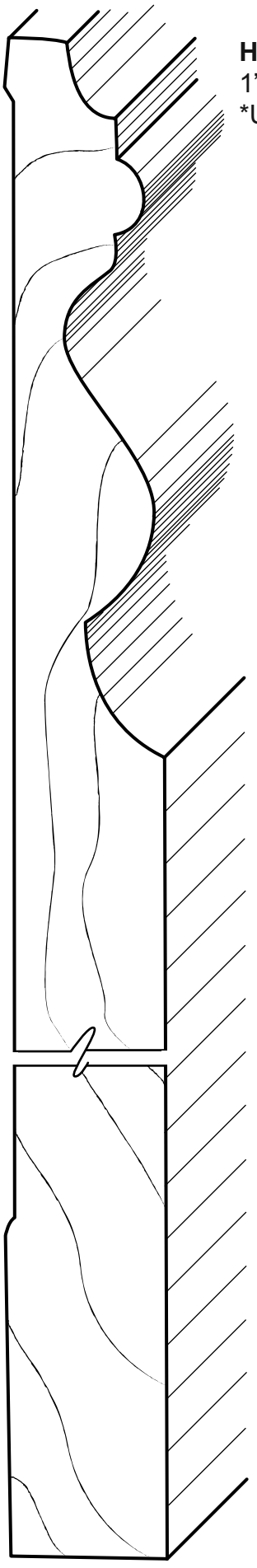

HM 1110
1” x Variable
*Up to 11 1/2”

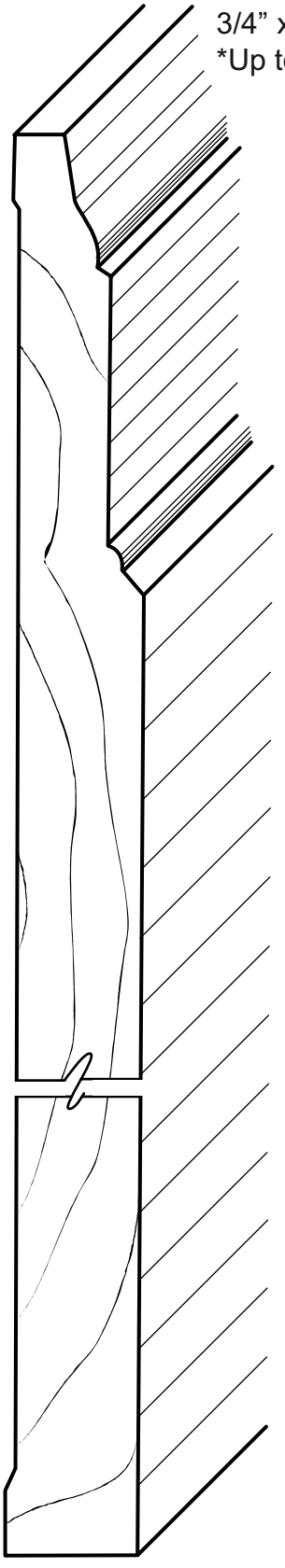

HM 1112
3/4” x Variable
*Up to 11 1/2”

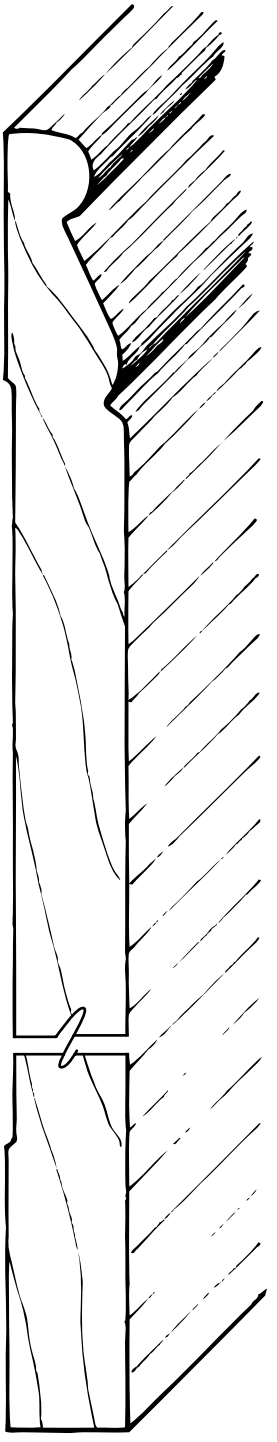

HM 1106
5/8” x Variable
*Up to 11 1/2”

HM 1107
5/8” x Variable
*Up to 11 1/2”

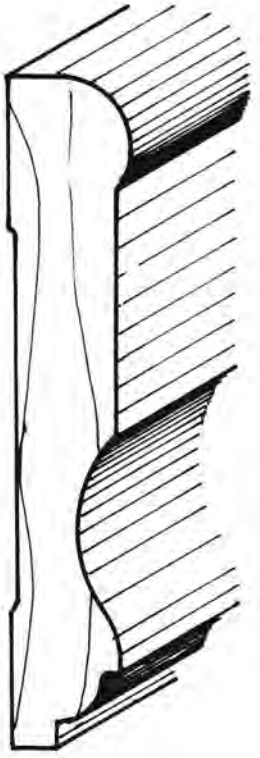

HM 1201
5/8” x 3 1/2”

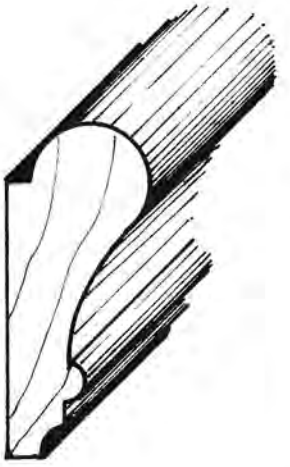

HM 1801
3/4” x 1 3/4”

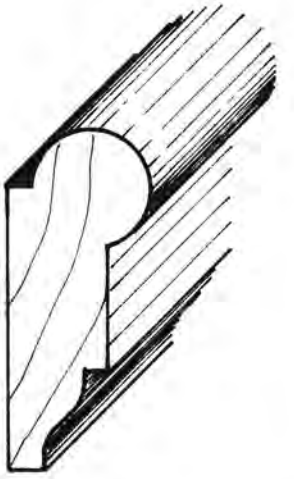

HM 1802
3/4” x 1 3/4”

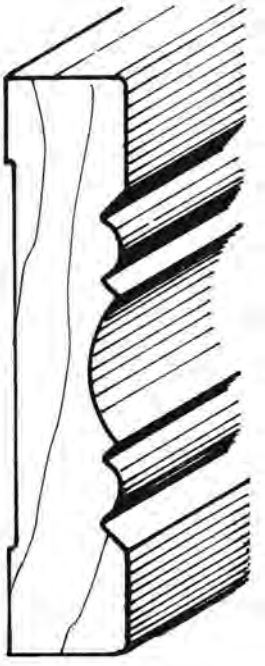

HM 1202
5/8” x 3”

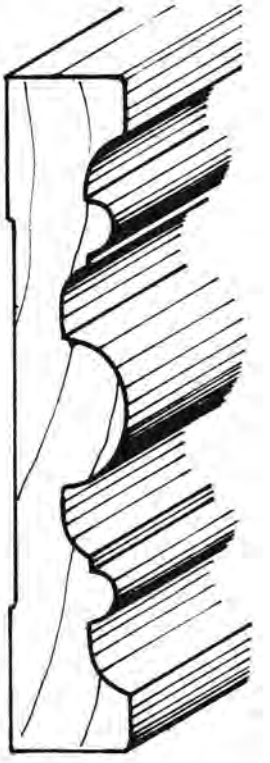

HM 1203
5/8” x 3 1/2”

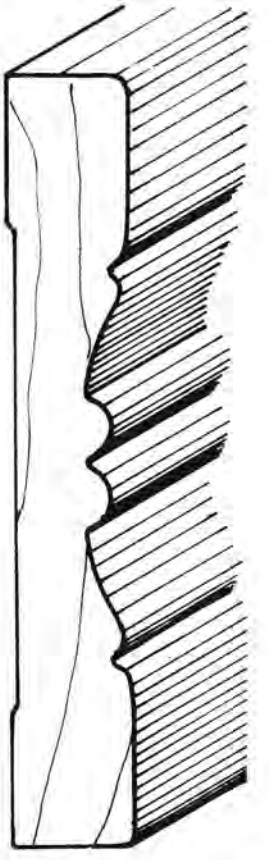

HM 1204
5/8” x 4”

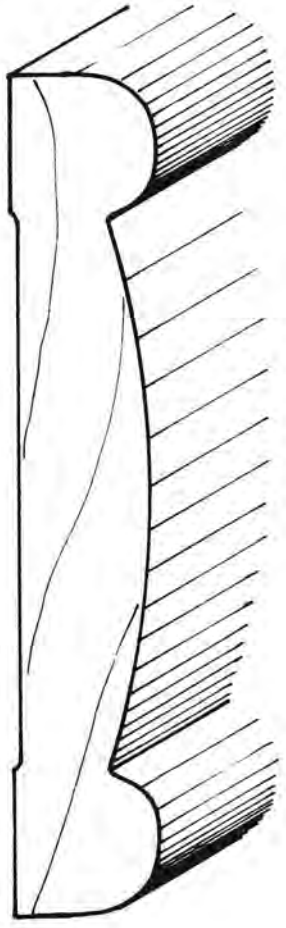

HM 1205
3/4” x 4 3/8”

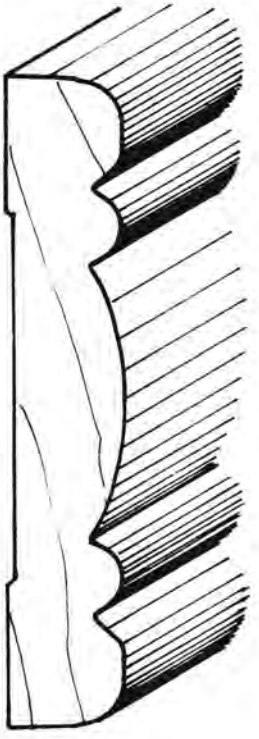

HM 1206
5/8” x 3 3/8”

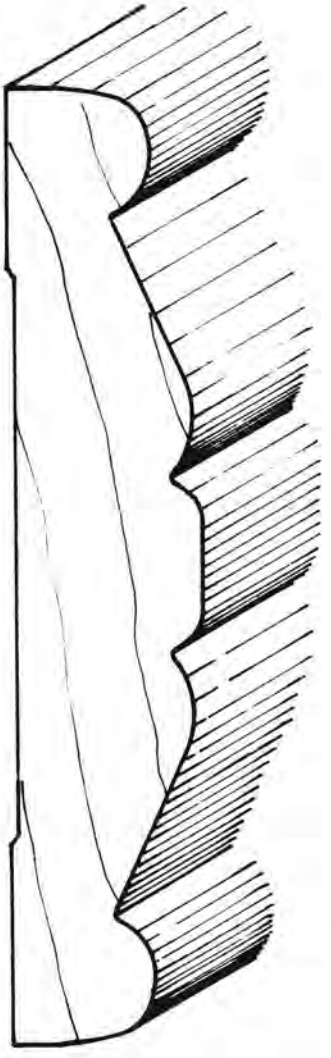

HM 1207
1” x 5”

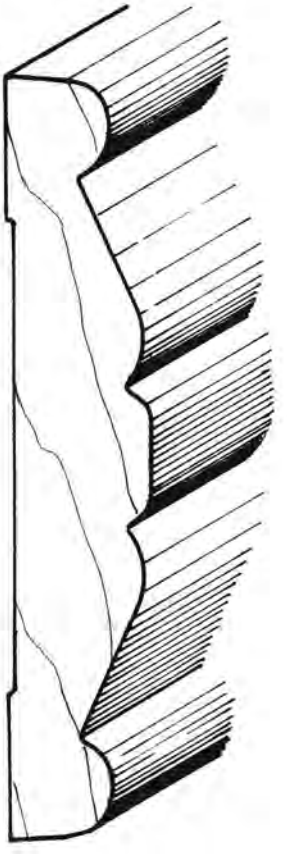

HM 1208
3/4” x 4”

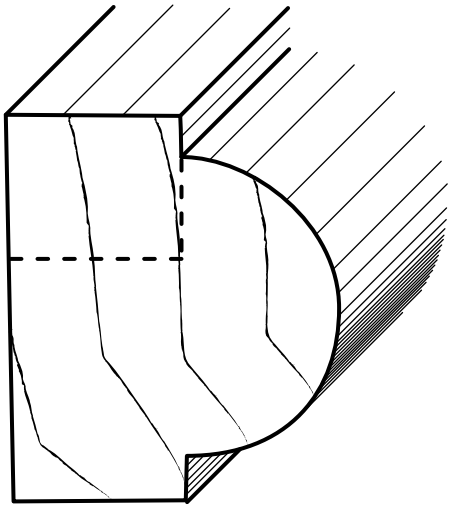

HM 370
2” x 1 3/4”
NOSING
*Rabbet Optional

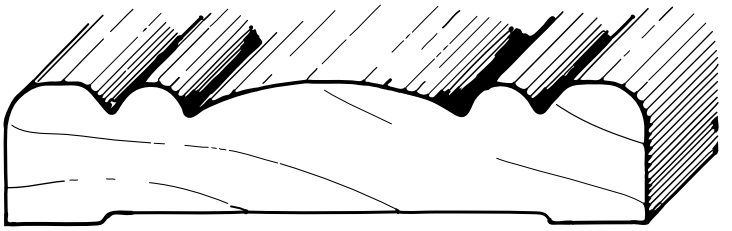

HM 1209
3/4” x 3 3/8”

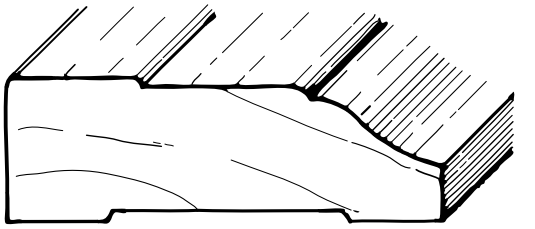

HM 1212
3/4” x 2 1/4”

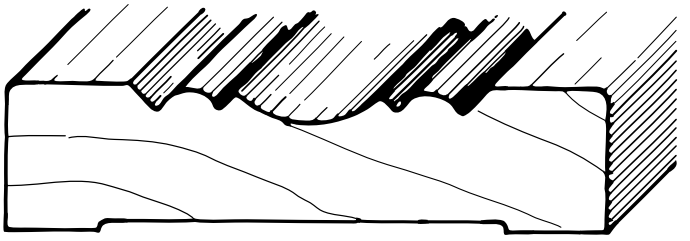

HM 1210
3/4” x 3 1/8”

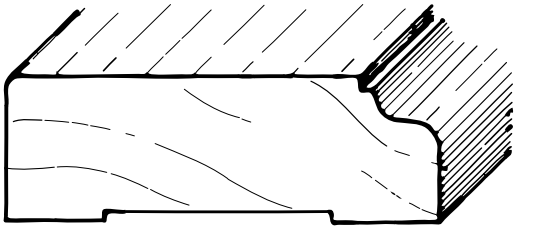

HM 1213
3/4” x 2 1/4”

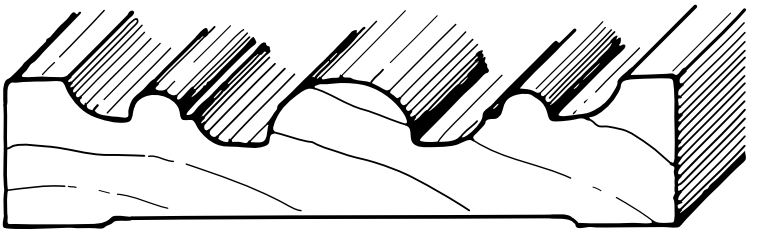

HM 1211
3/4” x 3 1/2”

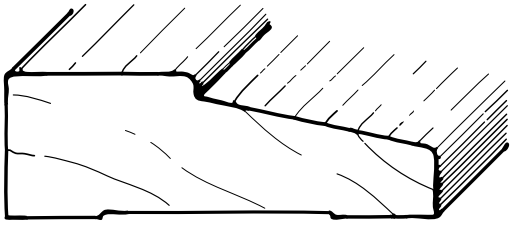

HM 1214
3/4” x 2 1/4”

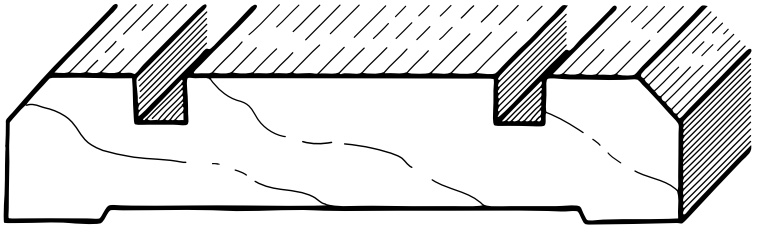

HM 1230 (To be used with plinth & casing blocks)
3/4” x 3 1/2”

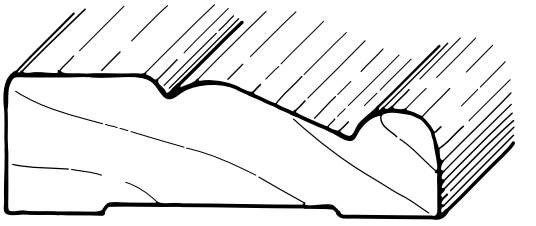

HM 1215
3/4” x 2 1/4”

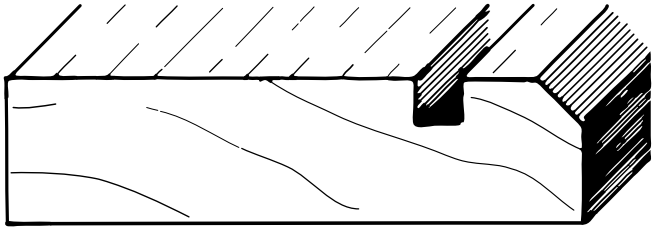

HM 1228
3/4” x 3”

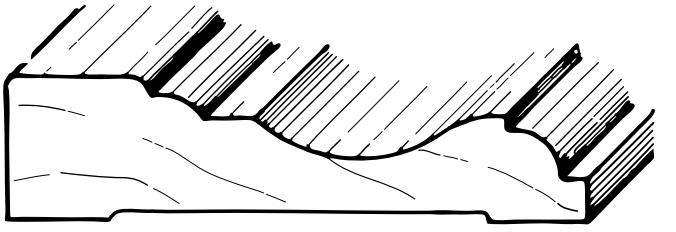

HM 1216
3/4” x 3”

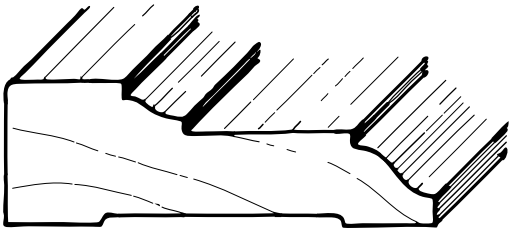

HM 1217
3/4” x 2 1/4”

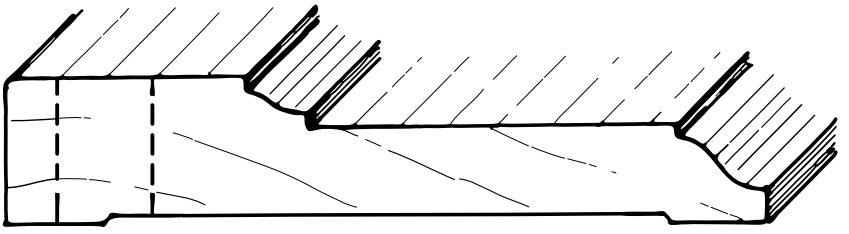

HM 1218
3/4” x 3 1/4”
3/4” x 3 3/4”
3/4” x 4”

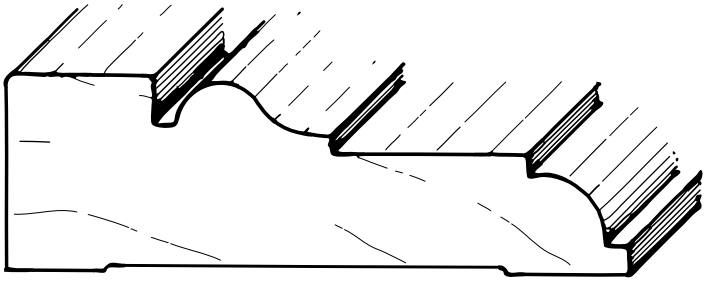

HM 1219
1” x 3 1/4”

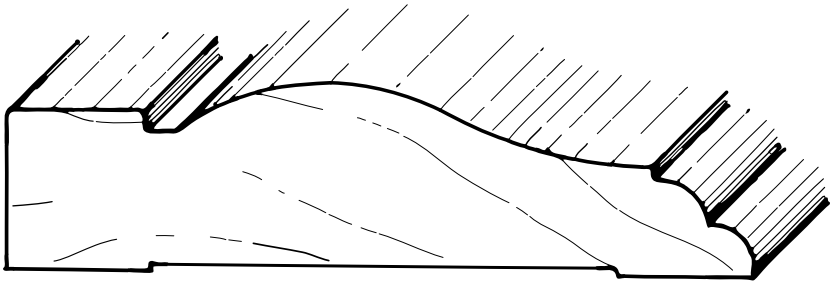

HM 1220
1” x 4”

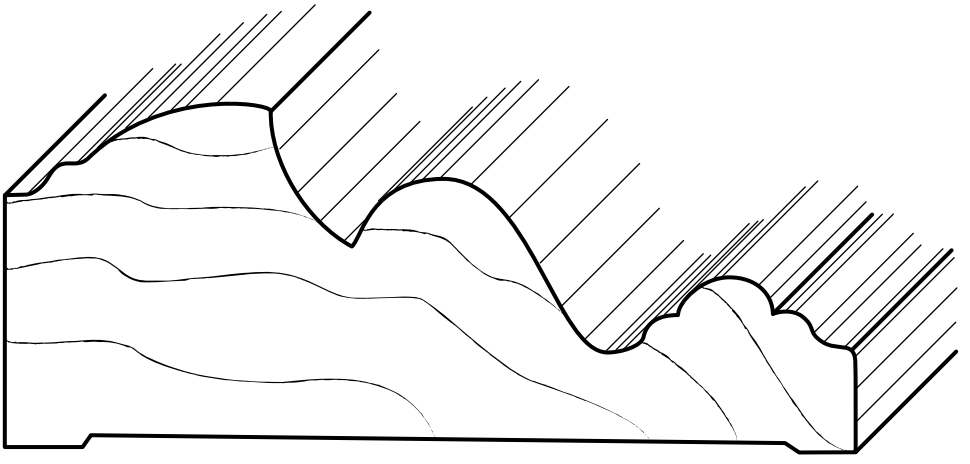

HM 1235
1 3/4” x 4 1/2”

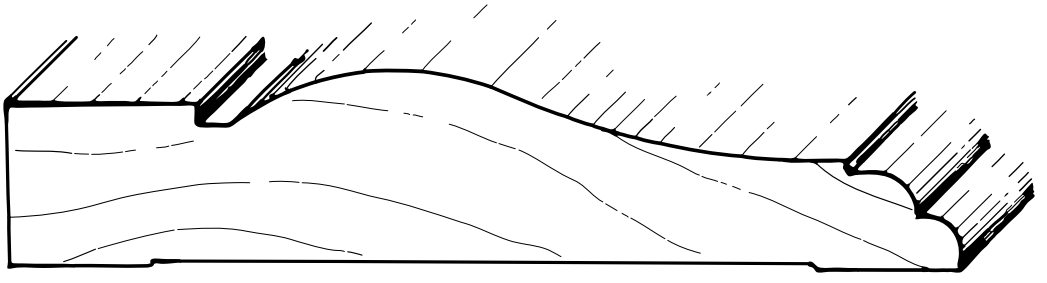

HM 1221
1” x 5”

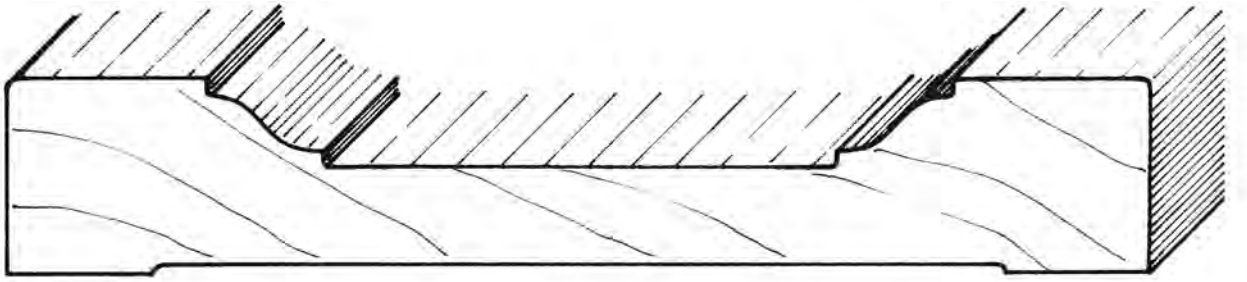

HM 1222 1” x 6”

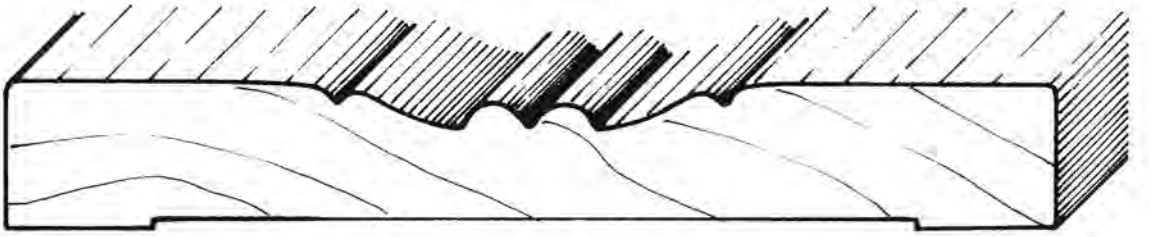

HM 1224 3/4” x 5 1/2”

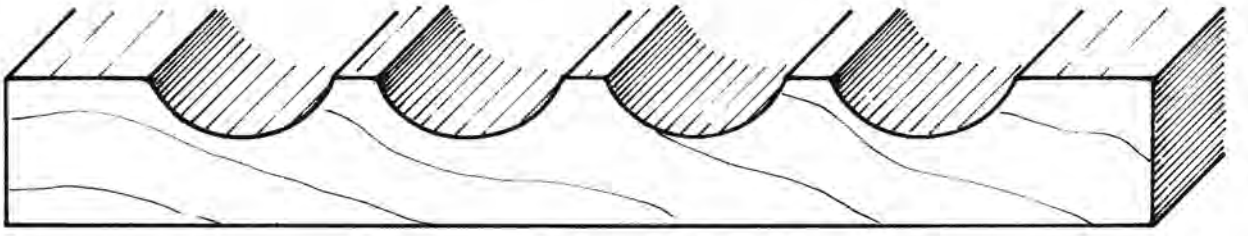

HM 1225 3/4” x 6”

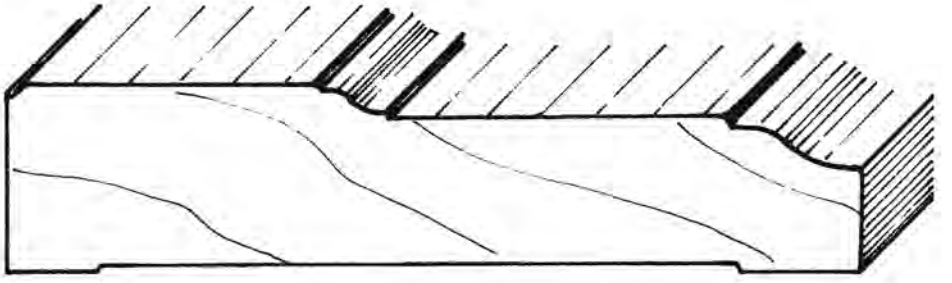

HM 1226 1” x 4 1/2”

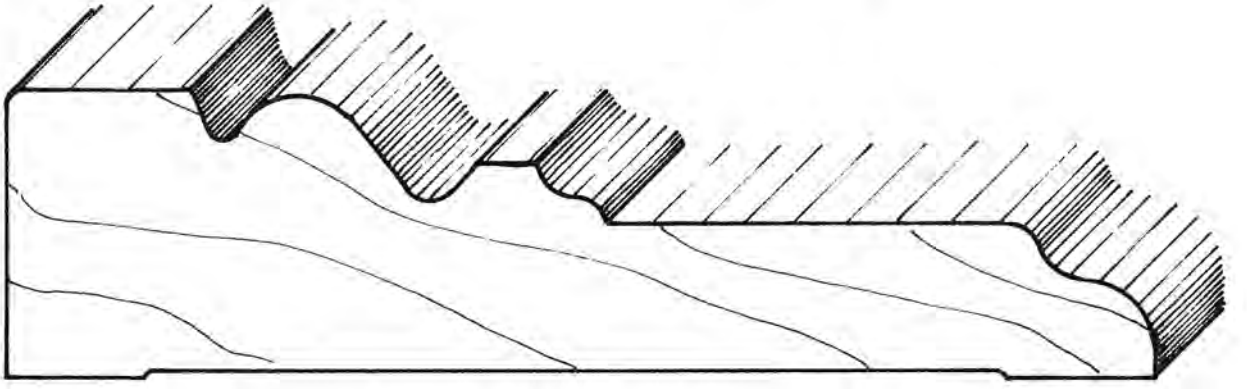

HM 1227 1 1/2” x 6”

SPECIAL ORDER CROWN MOLD

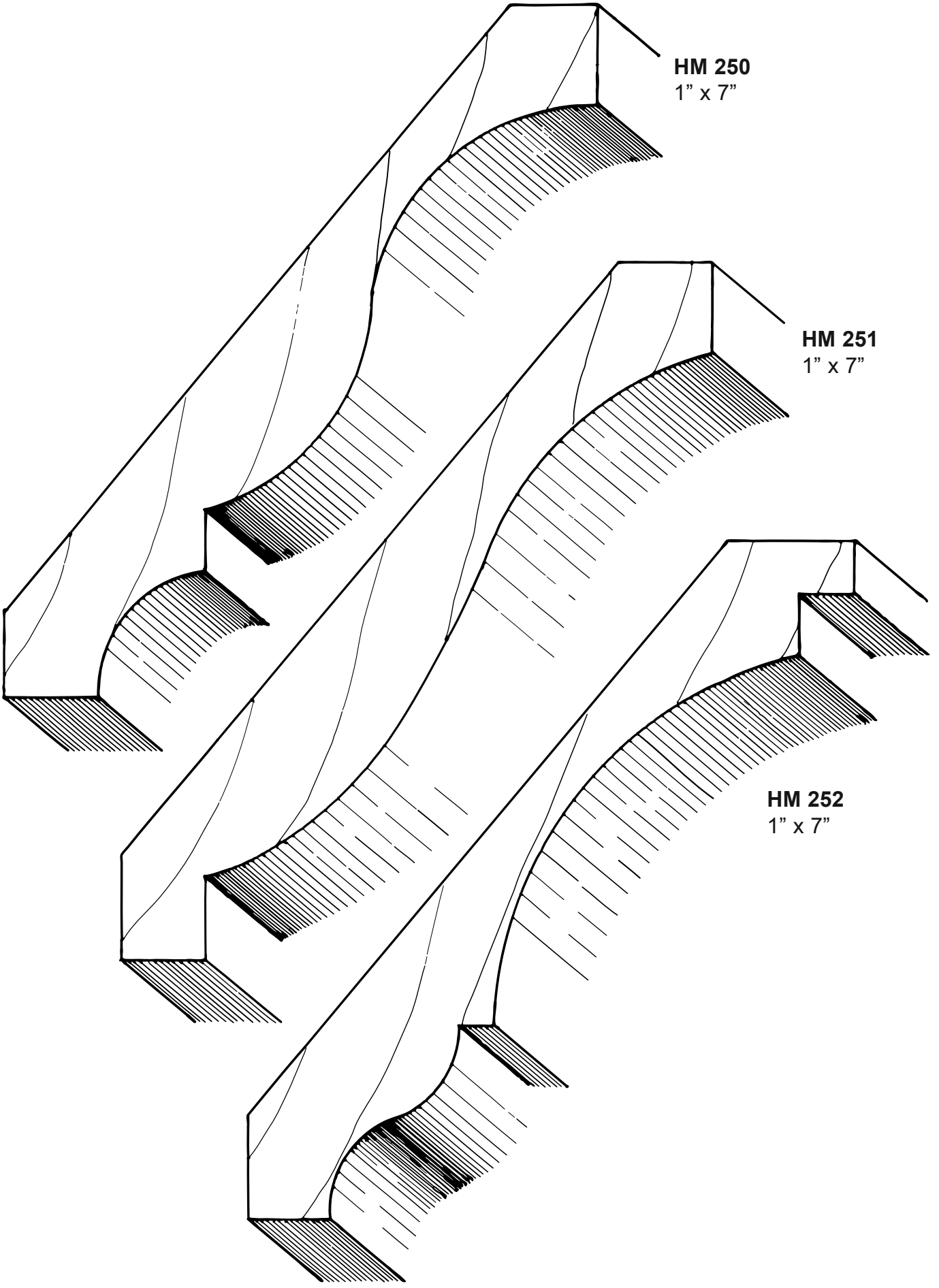

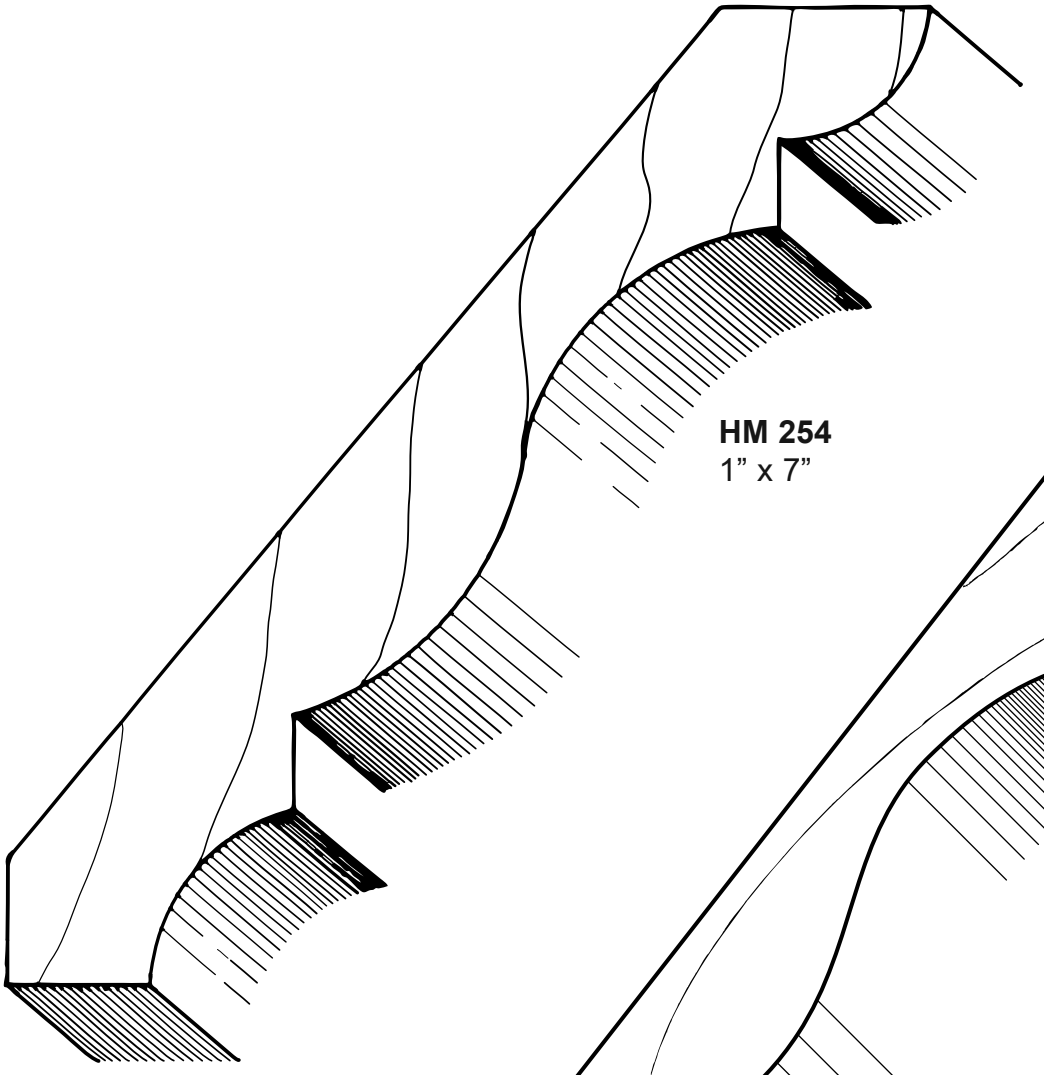

HM 254
1” x 7”

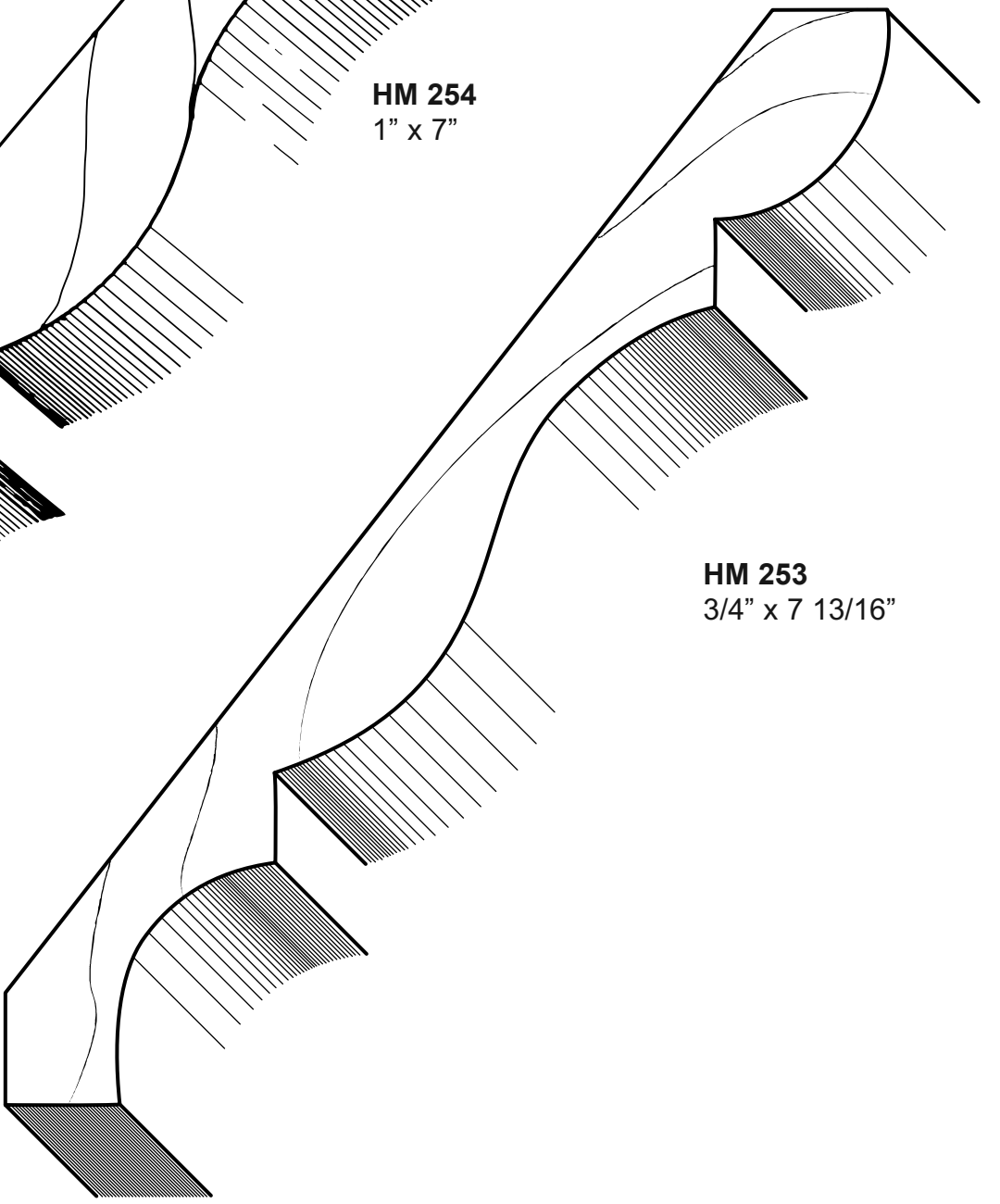

HM 253
3/4” x 7 13/16”

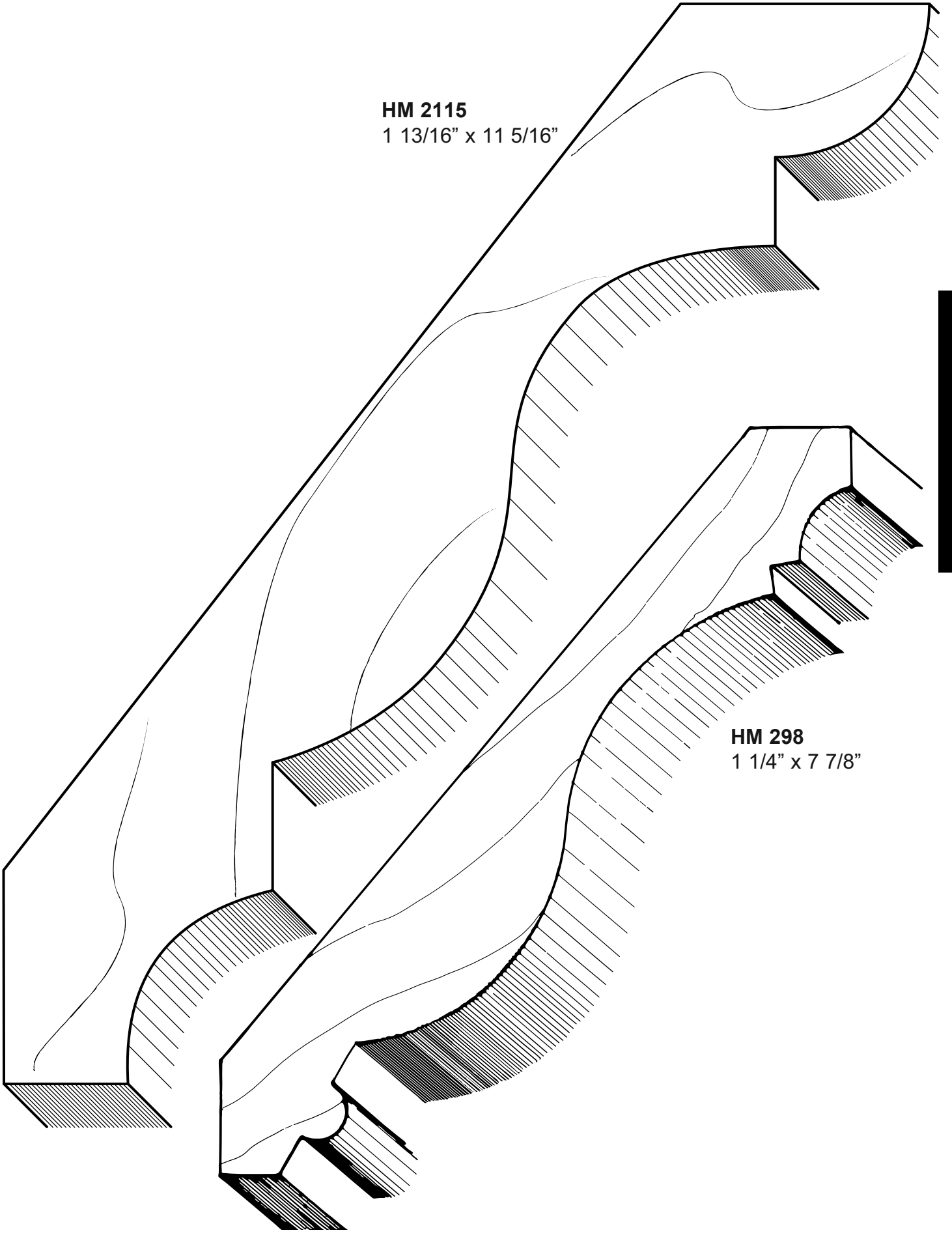
HM 2115
1 13/16” x 11 5/16”
HM 298
1 1/4” x 7 7/8”

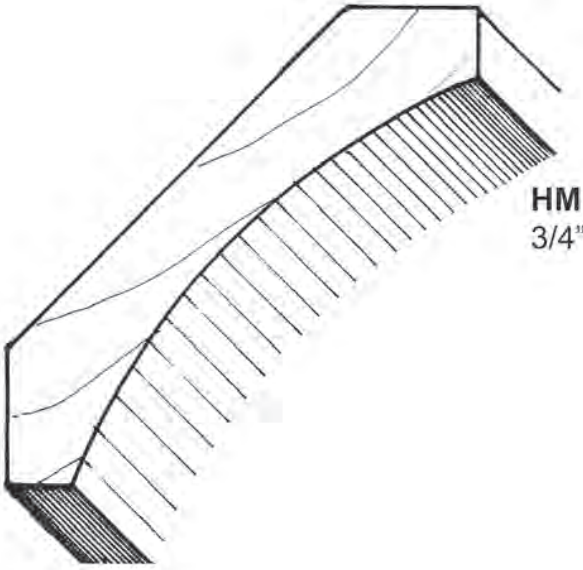

HM 1252
3/4" x 3 1/2"

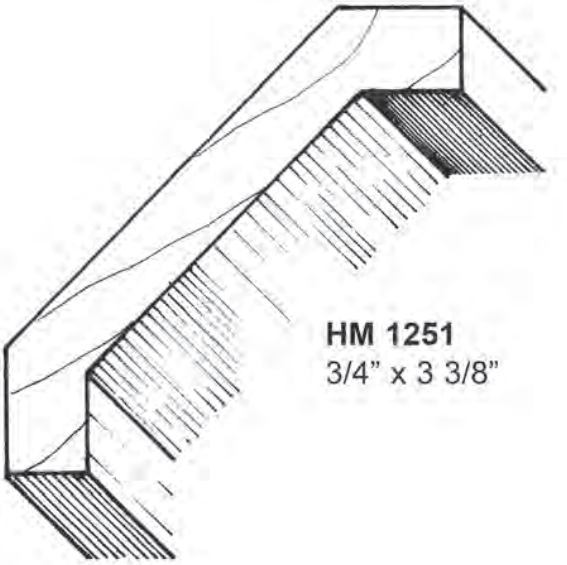

HM 1251
3/4" x 3 3/8"

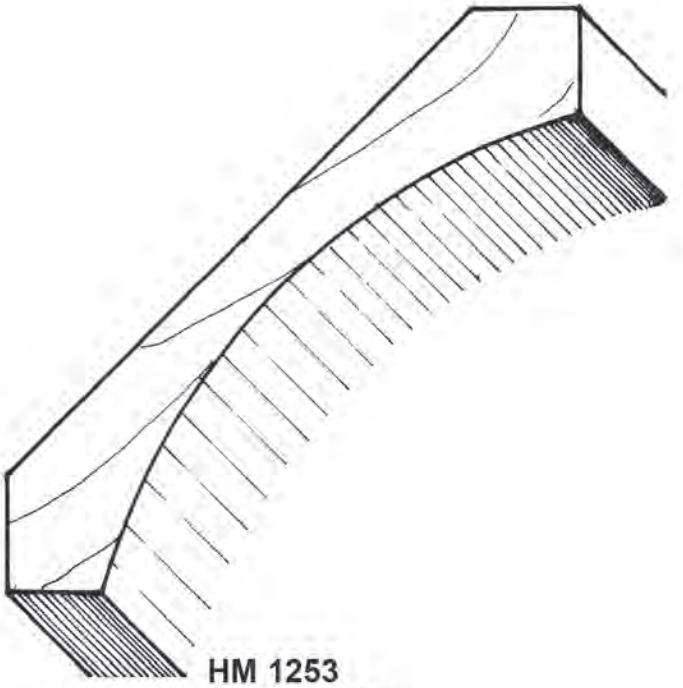

HM 1253
3/4" x 4 1/4"

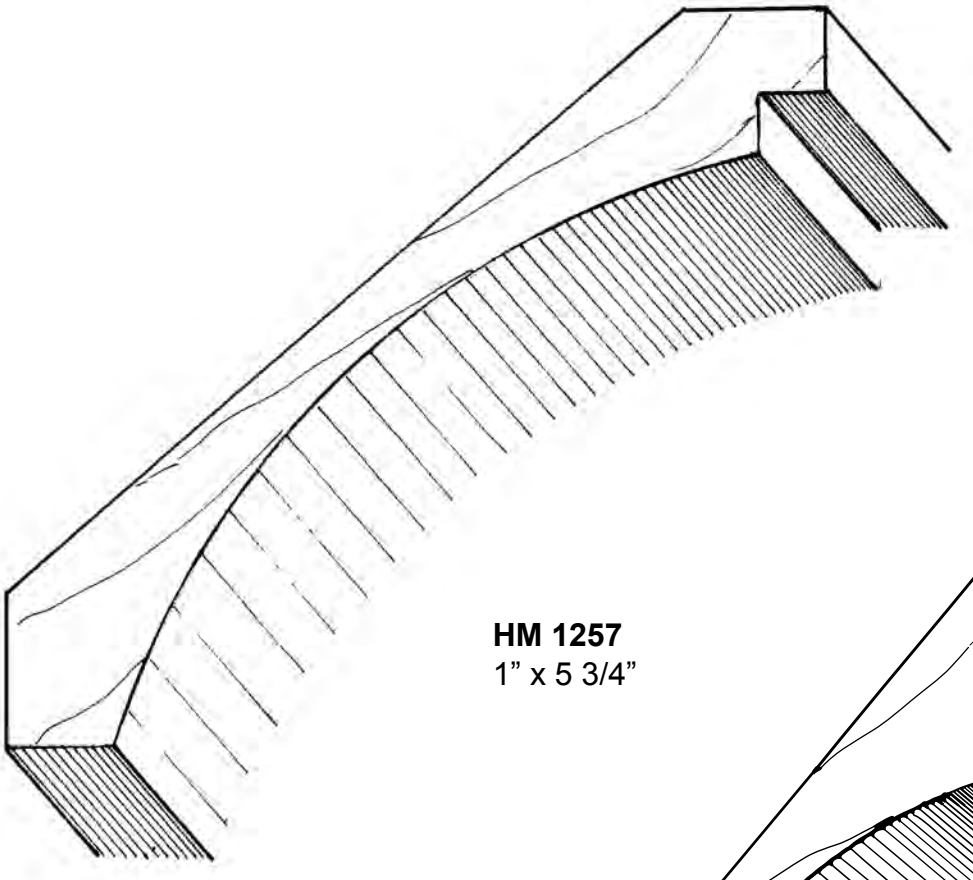

HM 1257
1” x 5 3/4”

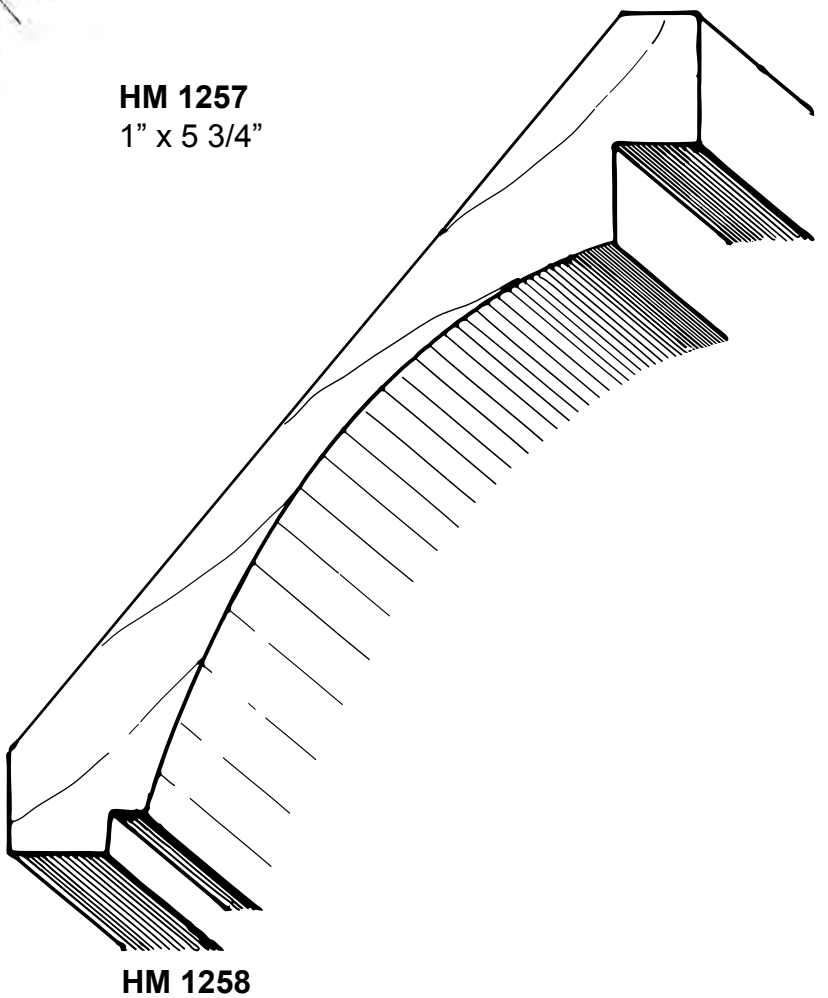

HM 1258
3/4” x 5 3 5/8”

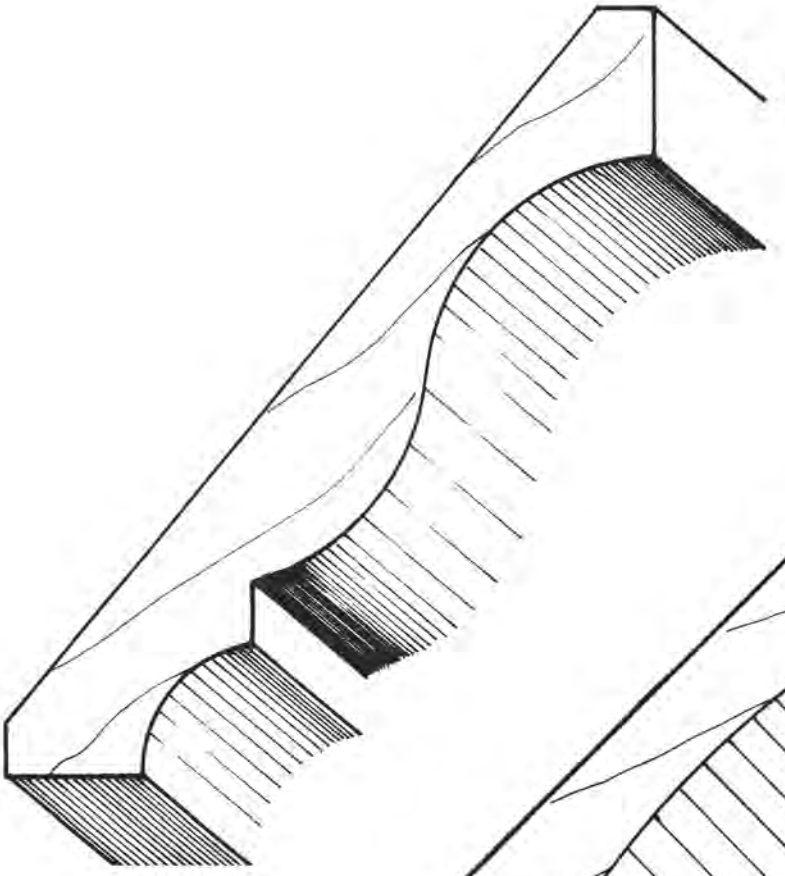

HM 1259
3/4" x 5 1/4"

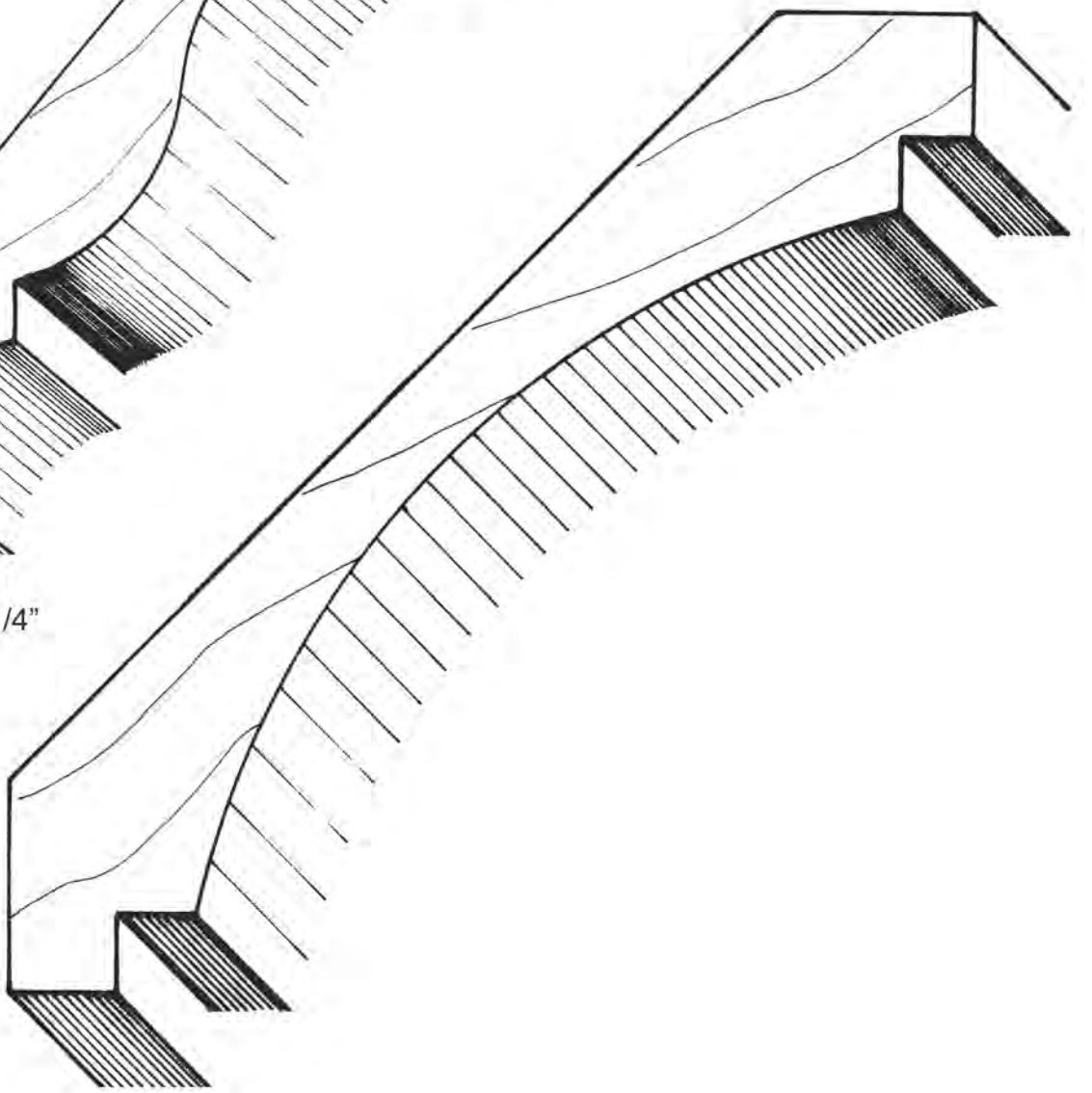

HM 1260
1 1/4" x 7 3/8"

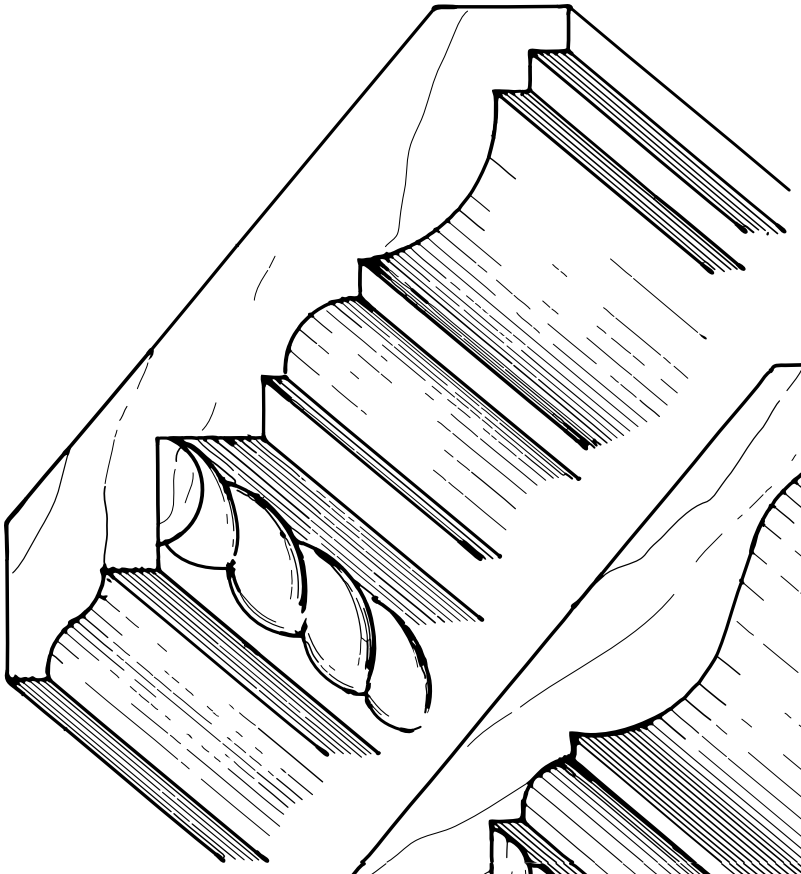

HM 1262
3/4” x 4 9/16”

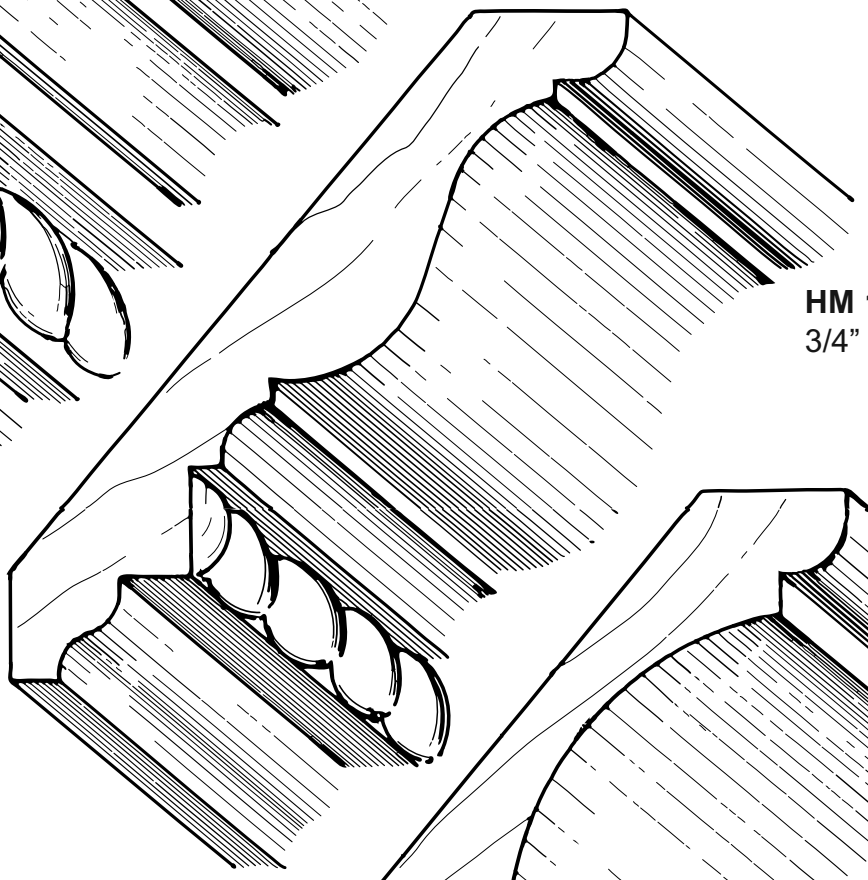

HM 1263
3/4” x 4 3/4”

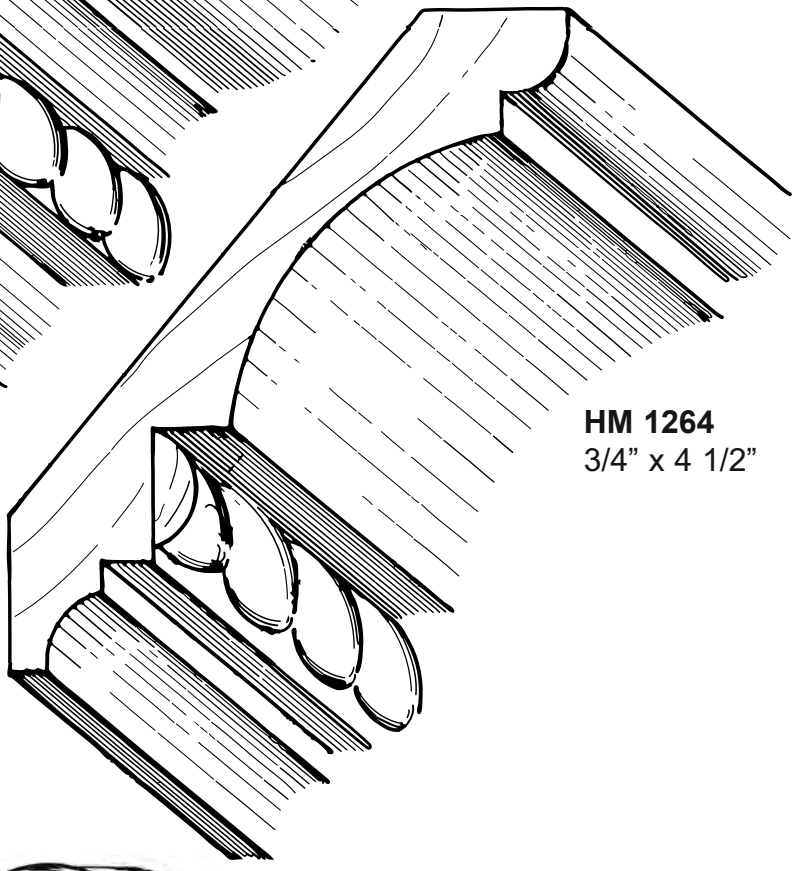

HM 1264
3/4” x 4 1/2”

Rope Mold Unattached
Purchase Separately

ROPE MOLD
*** R 12** 1/2”
*** R 34** 3/4”
*** R 1** 1”

*** In Stock**
P O A M C

LEGEND: **P**=Poplar, **O**=Oak, **A**=Alder, **M**=Maple, **C**=Cherry

HM 1471
5/8” x 2 1/2”

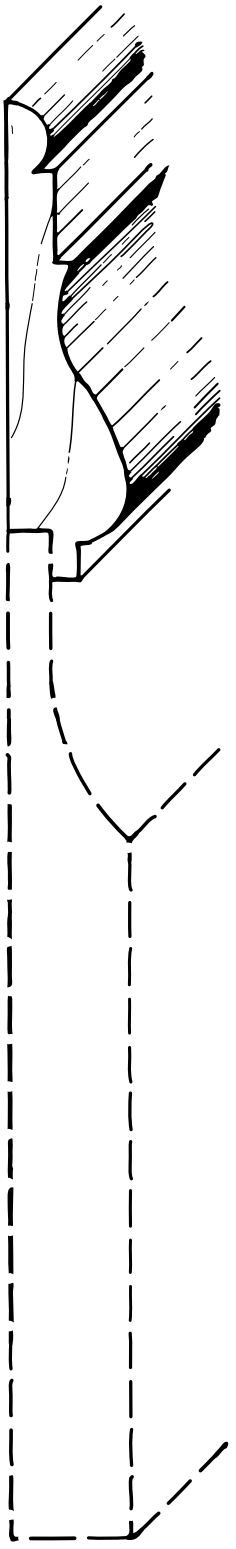

HM 1472
5/8” x 2 3/4”

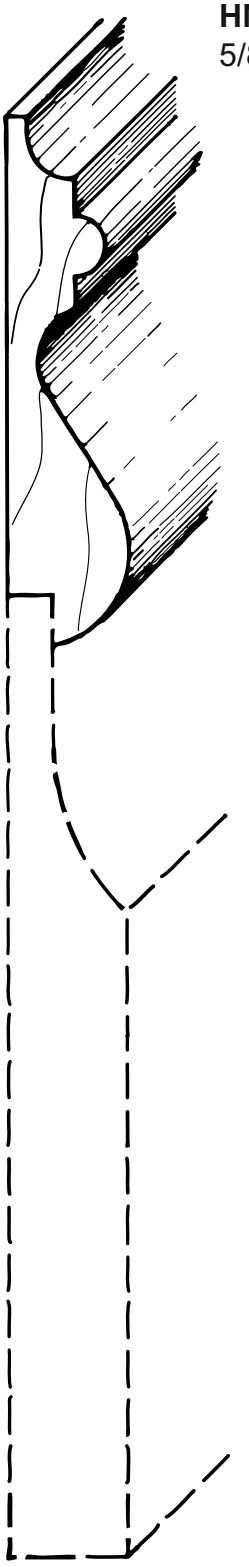

HM 1750
3/4” x Varies

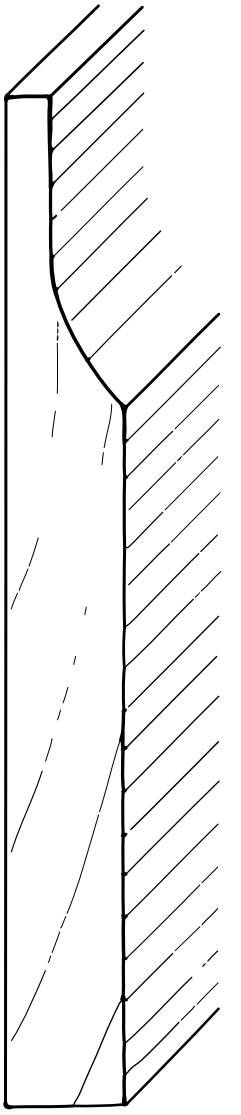

HM 1756
5/8” x Varies

HM 750
3/4” x Variable Width
***In Stock 5 1/2”**
KA

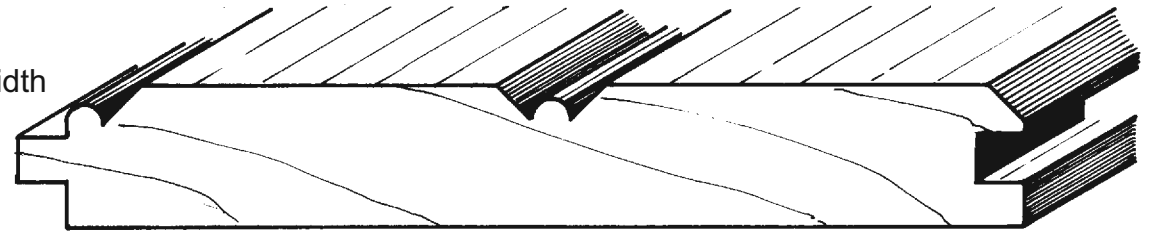

HM 751
3/4” x Variable Width
***In Stock 5 1/2”**
KA

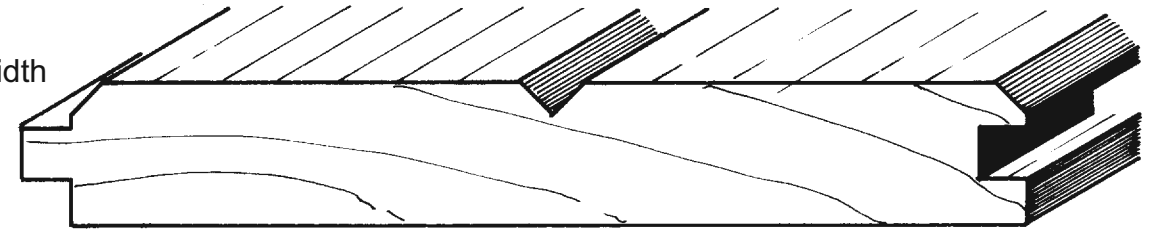

HM 752
3/4” x Variable Width

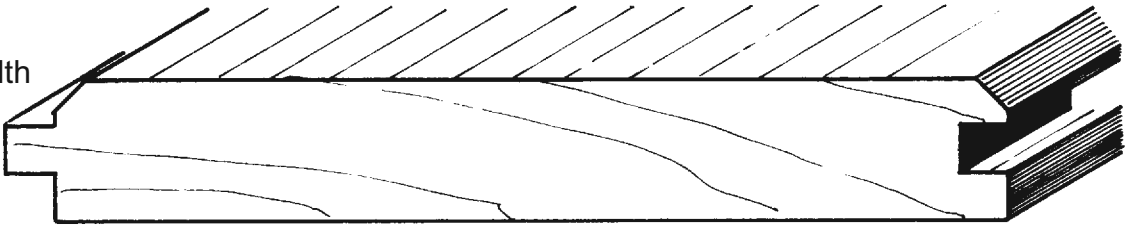

HM 753
3/4” x Variable Width

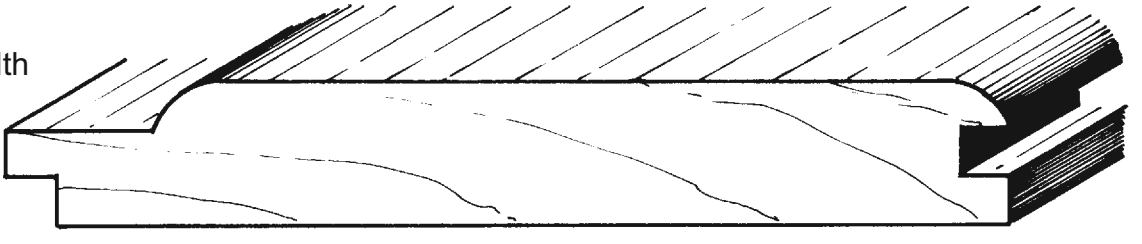

HM 754
3/4” x Variable Width

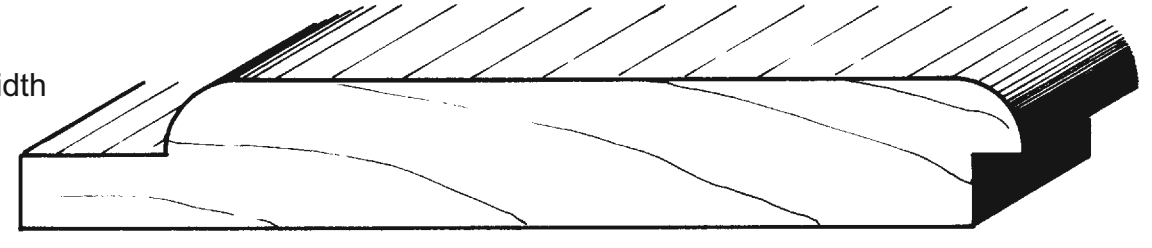

HM 756
3/4” x Variable Width

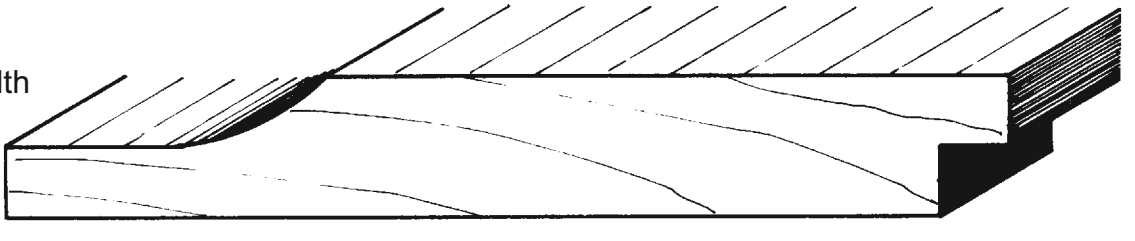

HM 757
3/4” x 5 1/4”

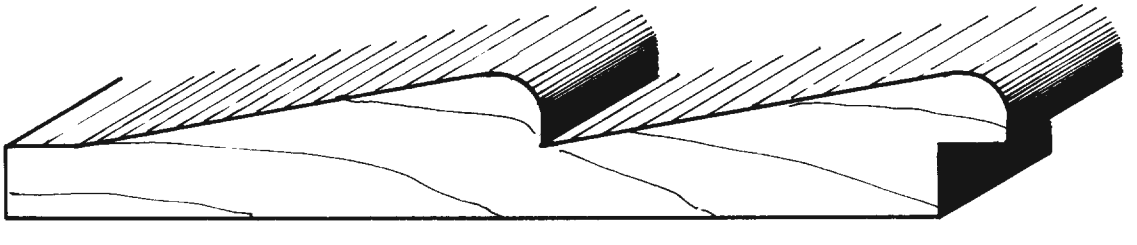

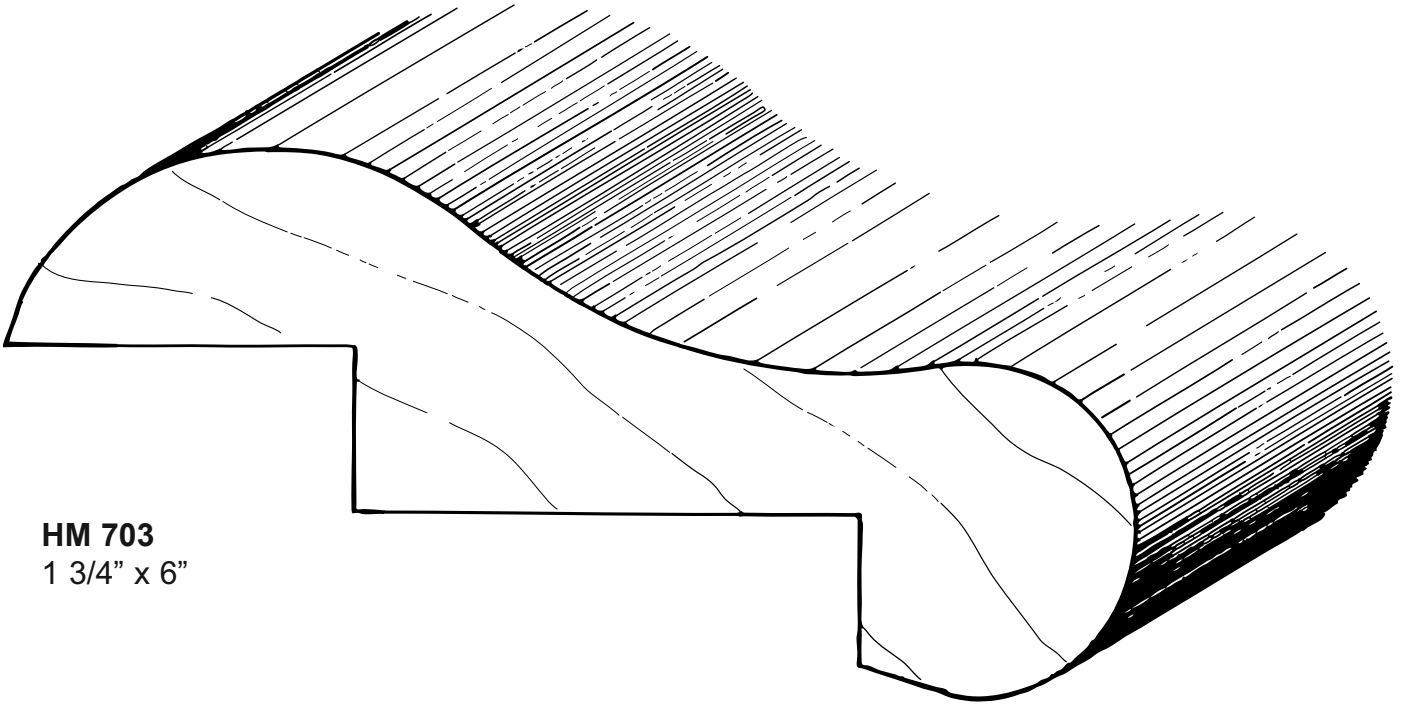

HM 703
1 3/4” x 6”

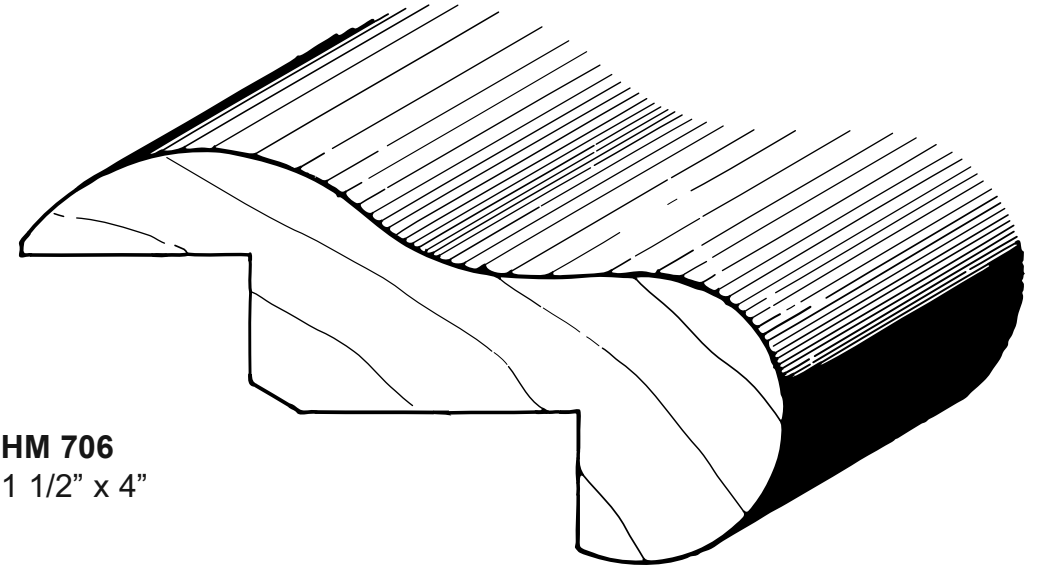

HM 706
1 1/2” x 4”

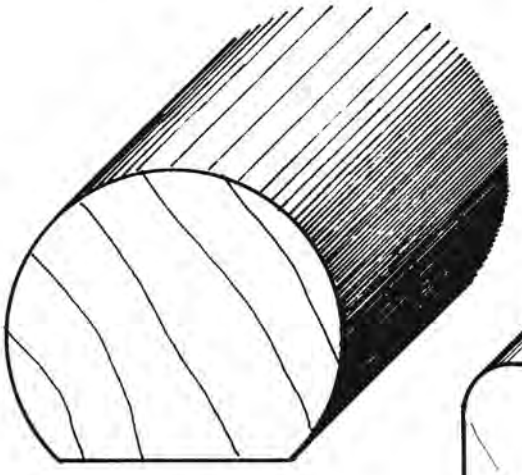

HM 550
1 3/4” Round
(stock)
O M A P

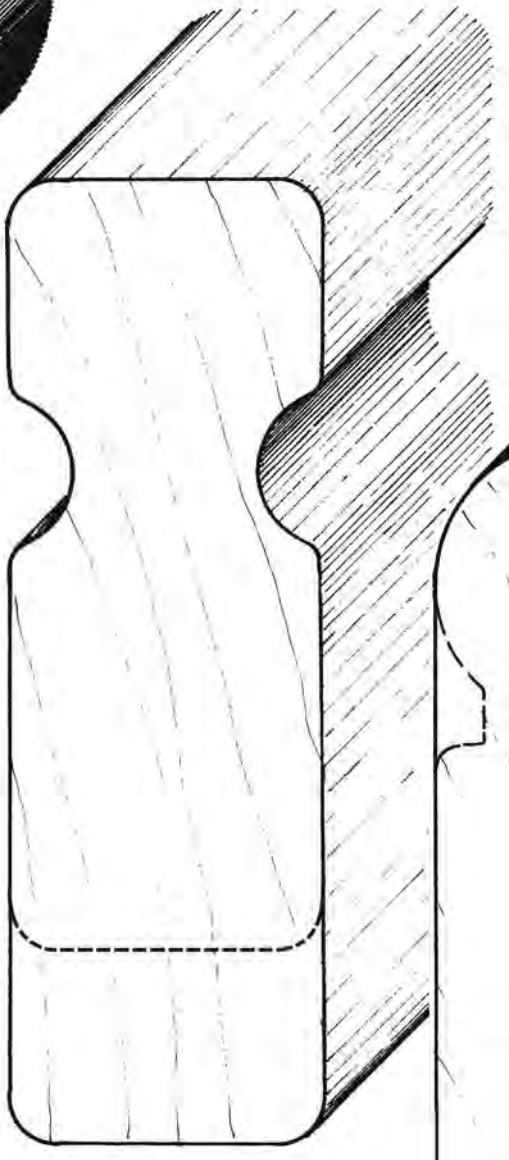

HM 5594
1 5/8” x 4”
(stock)
O SM

HM 559
1 5/8” x 5”
(stock)
O M A P

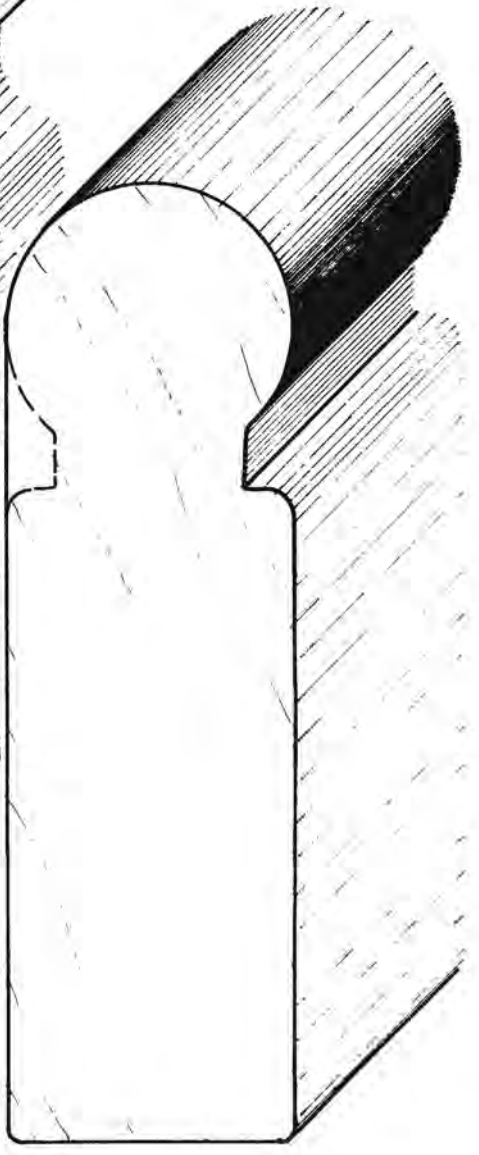

HM 560
1 1/2” x 5”
(special order)

LEGEND: **O**=Oak, **A**=Alder, **KA**=Knotty Alder, **P**=Poplar, **C**=Cherry, **M**=Maple, **SM**=Soft Maple, **H**=Hickory

CORNER BLOCKS

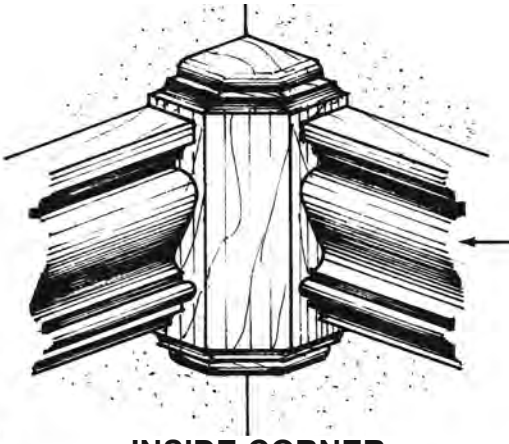

INSIDE CORNER
CHAIR RAIL BLOCK
3000C
(SPECIAL ORDER)

BASE BOARD

RADIUS CORNER
BASE BLOCK
2800B
(Custom radius base and chair rail profiles available)

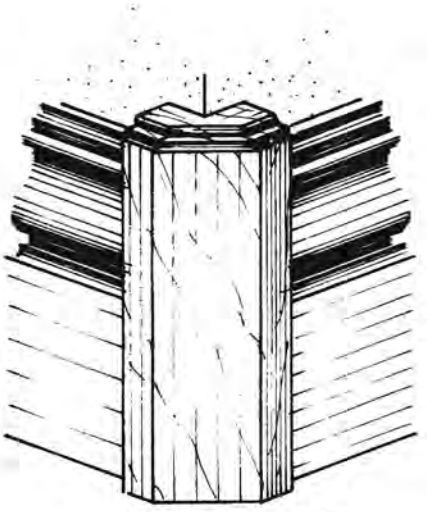

OUTSIDE CORNER
BASE BLOCK
3100B

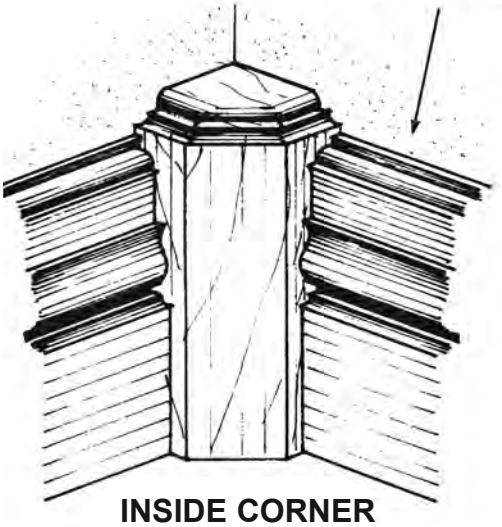

INSIDE CORNER
3000B

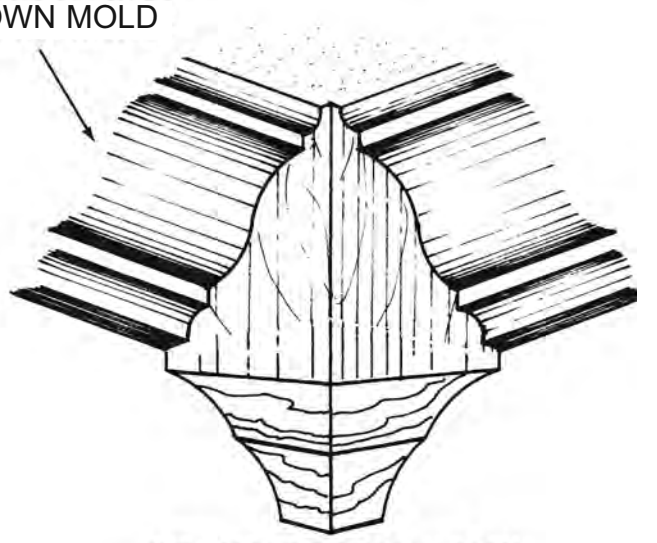

CEILING CORNER BLOCK
2730CP (3”)
2735CP (3 1/2”)

DESIGN OPTIONS

CASING BLOCKS

2925CP (2 1/2") 2935CP (3 1/2")
2945CP (4 1/2") 2965CP (6 1/2")

A P M O C

(SPECIAL ORDER)

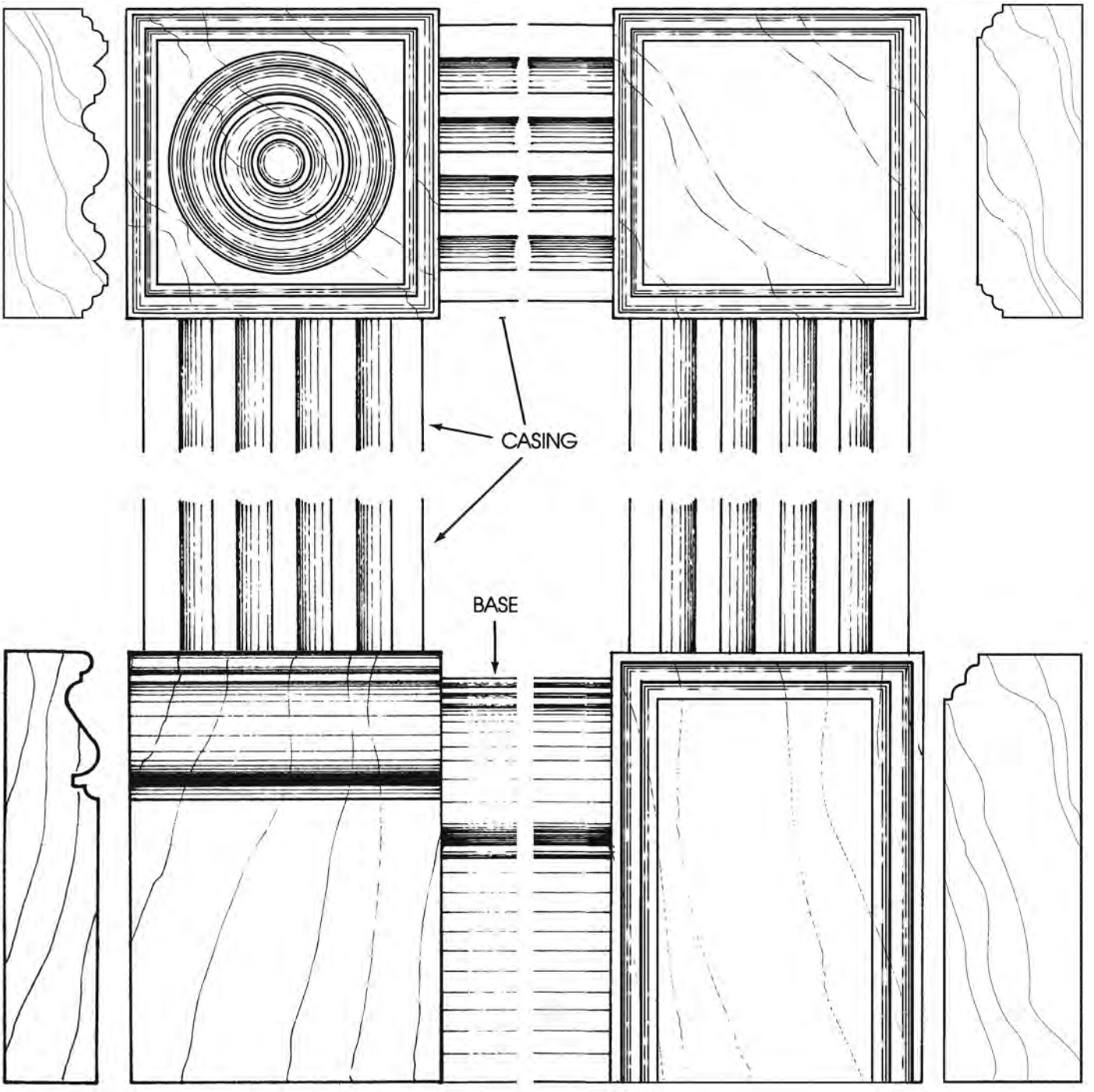

(SPECIAL ORDER)

PLINTH BLOCKS

2635CP (3 1/2" wide)
2645CP (4 1/2" wide)

A P M O C

LEGEND: **O**=Oak, **A**=Alder, **KA**=Knotty Alder, **P**=Poplar, **C**=Cherry, **M**=Maple, **SM**=Soft Maple, **H**=Hickory

SAMPLE – STILE AND RAIL WALL PANELING

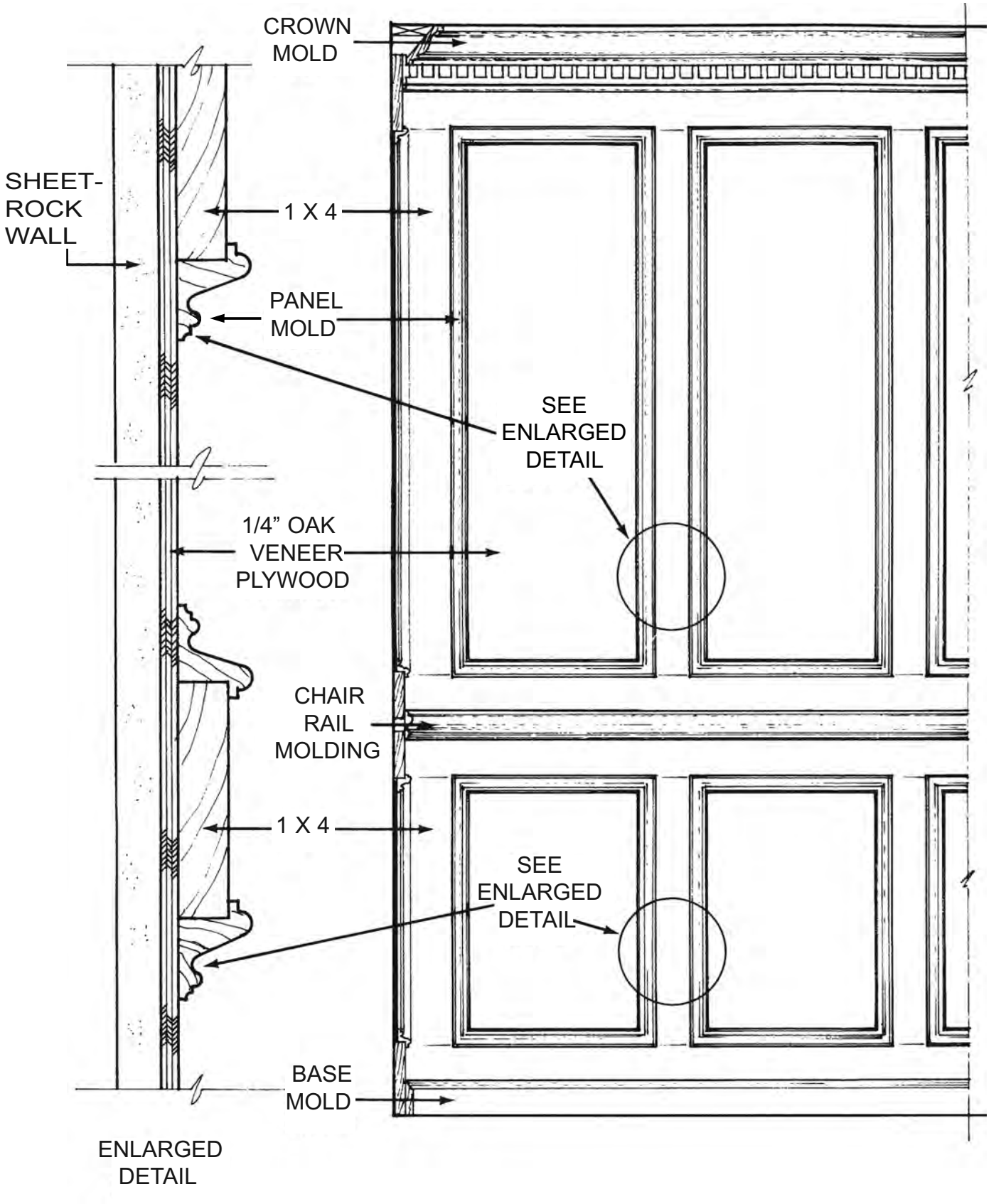

DESIGN OPTIONS

SAMPLE – WAINSCOT CAP MOLD

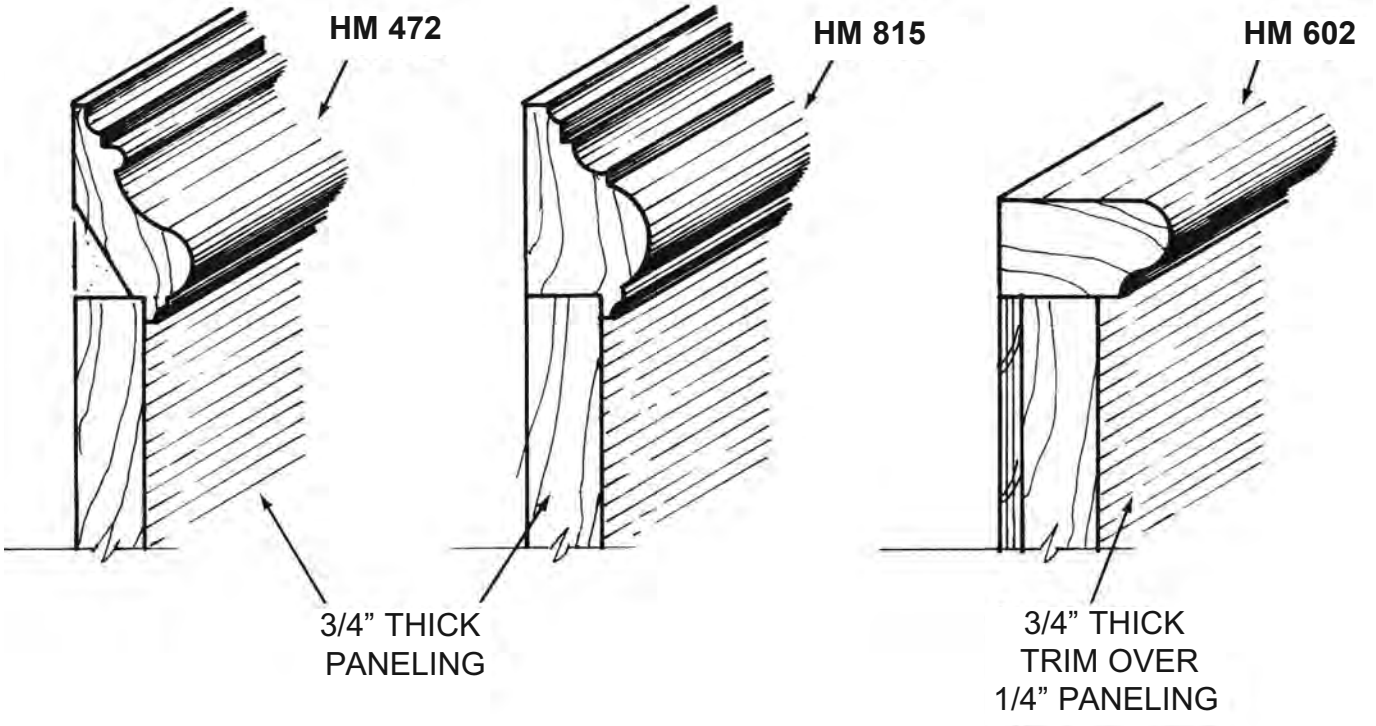

SAMPLE – BUILT-UP BASE MOLD

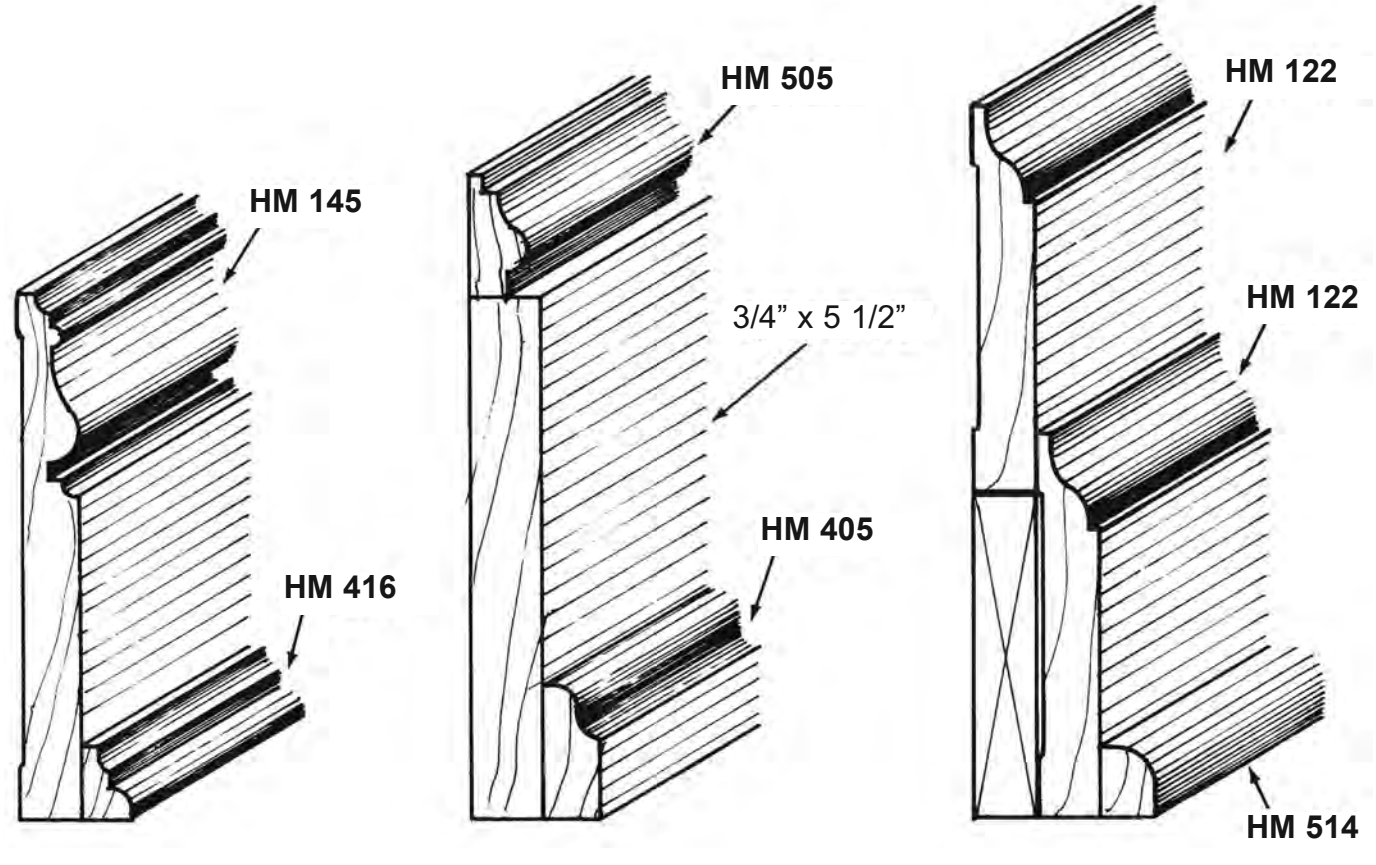

SAMPLE – BUILT-UP CROWN MOLD

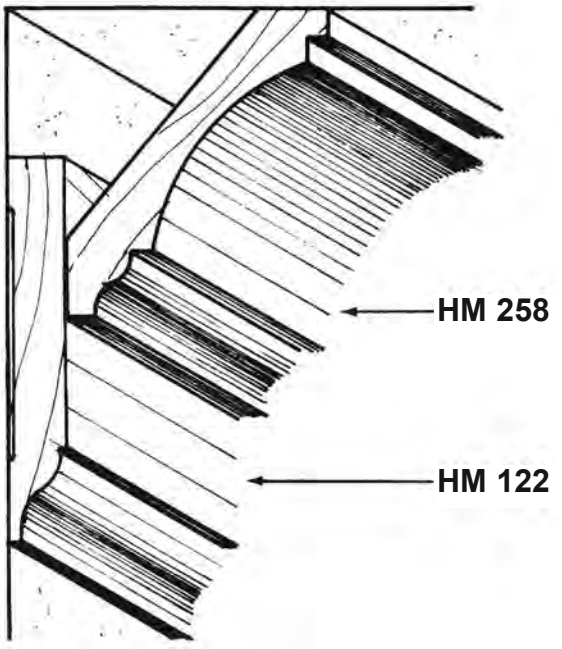

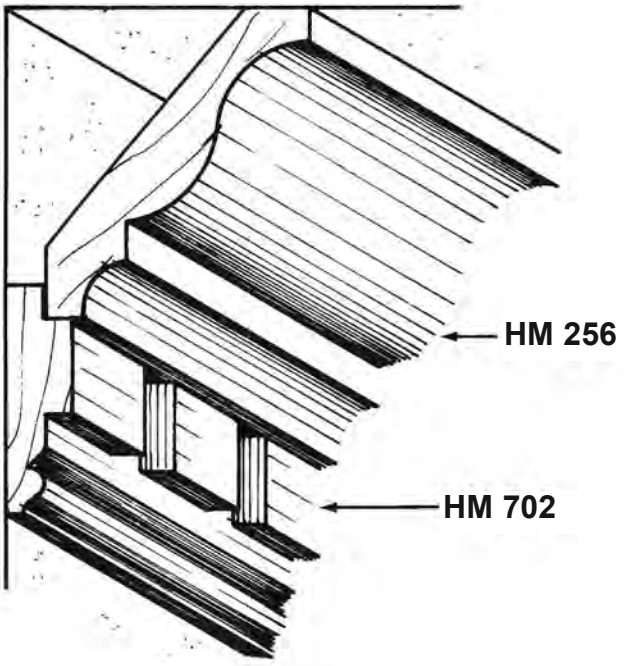

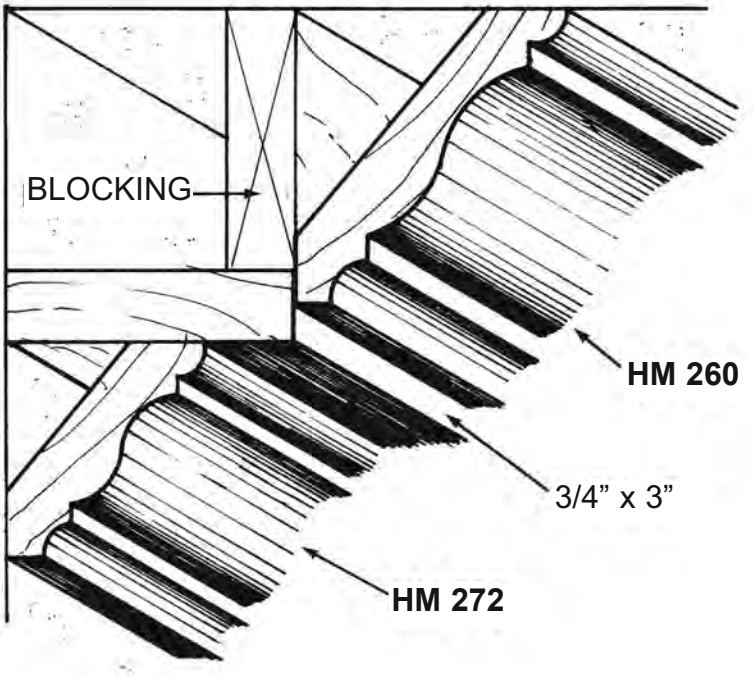

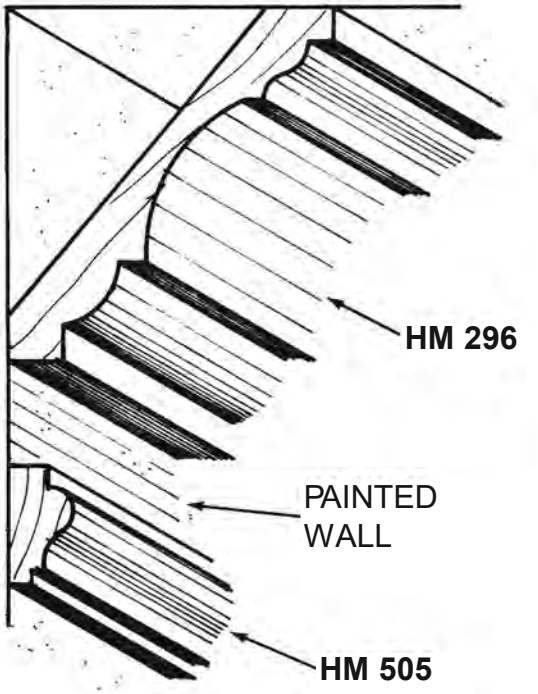

SAMPLE – BUILT-UP CROWN, DOOR CORNICE HEADER

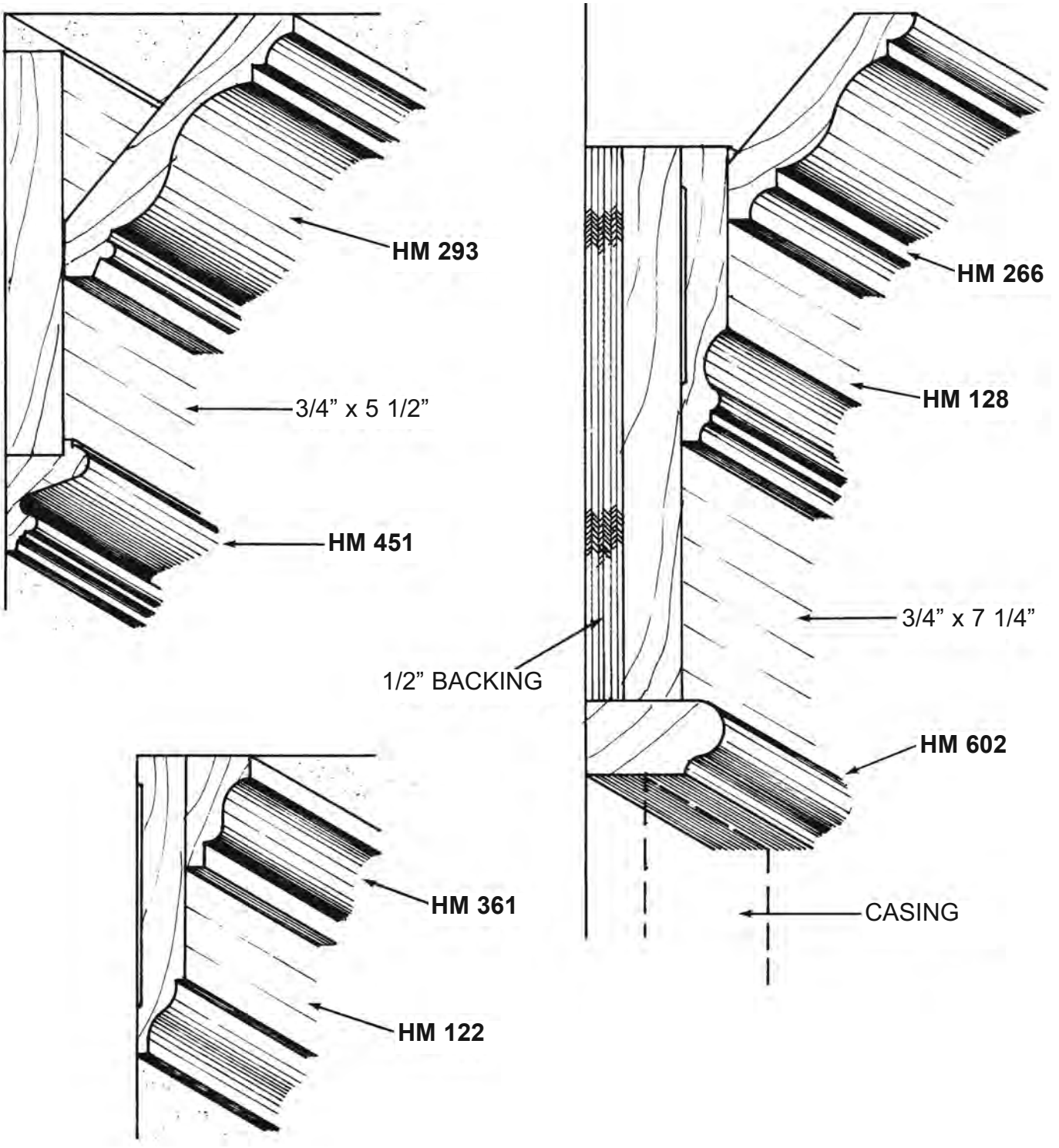

301 URN-SHAPED TURNING

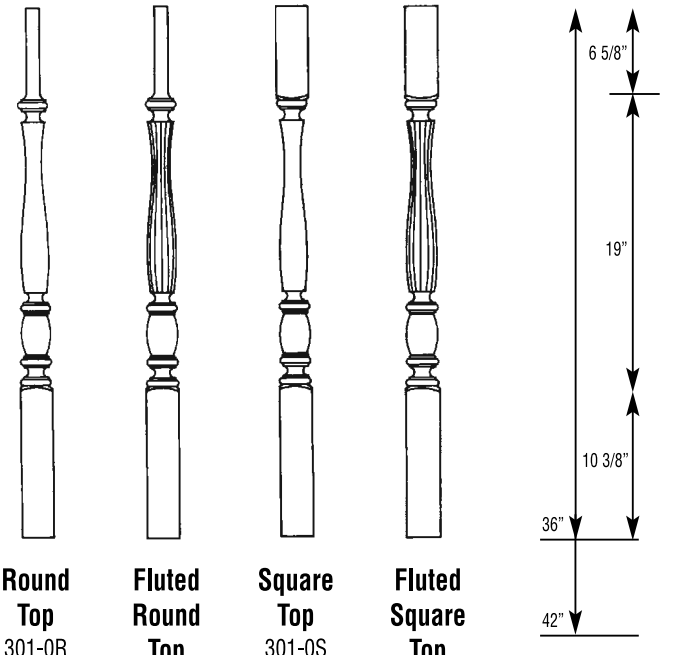

Round Top
301-0R
301-1R

Fluted Round Top
301-0RF
301-1RF

Square Top
301-0S
301-1S

Fluted Square Top
301-0SF
301-1SF

302 STRAIGHT TAPERED TURNING

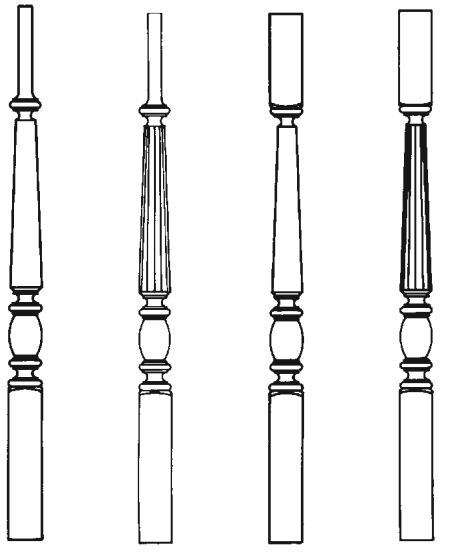

Round Top
302-0R
302-1R

Fluted Round Top
302-0RF
302-1RF

Square Top
302-0S
302-1S

Fluted Square Top
302-0SF
302-1SF

1 1/4" AND 1 3/4" BALUSTER

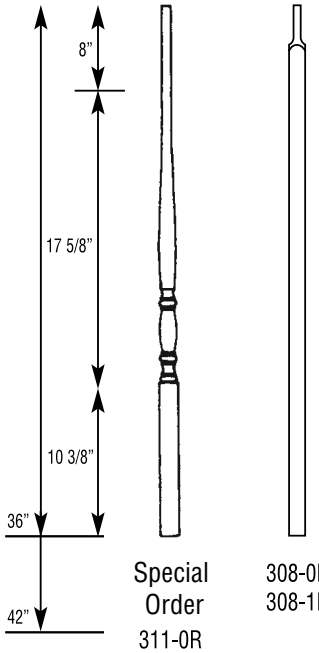

Special Order
311-0R
311-1R

308-0R
308-1R

BLANKS & CHAMFERED BALUSTERS

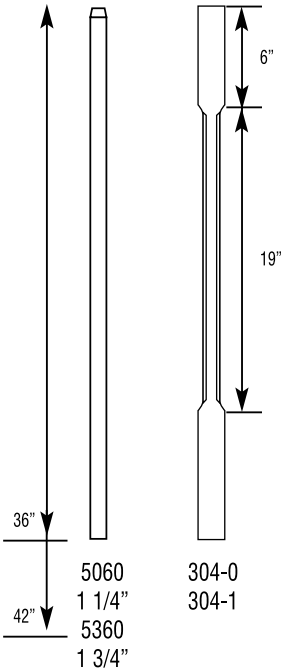

5060
1 1/4"
5360
1 3/4"

304-0
304-1

HOW TO ORDER BALUSTERS

301 - 0 R F - 0 36"
301 - 1 R F - 0 36"

301	Indicates Baluster Style
0	1 1/4"
1	1 3/4"
R	Describes Top (R = Round, S = Square)
F	Indicates Fluted
0	Species of Wood
36"	Total Length in Inches (36", 42")

Baluster Sizes
0R has 1 1/4" square size and 5/8" diameter round top.
1R has 1 3/4" square size and 3/4" diameter round top.

Lengths
36" or 42" for all balusters and dowels.

201 URN-SHAPED TURNING

202 STRAIGHT TAPERED TURNING

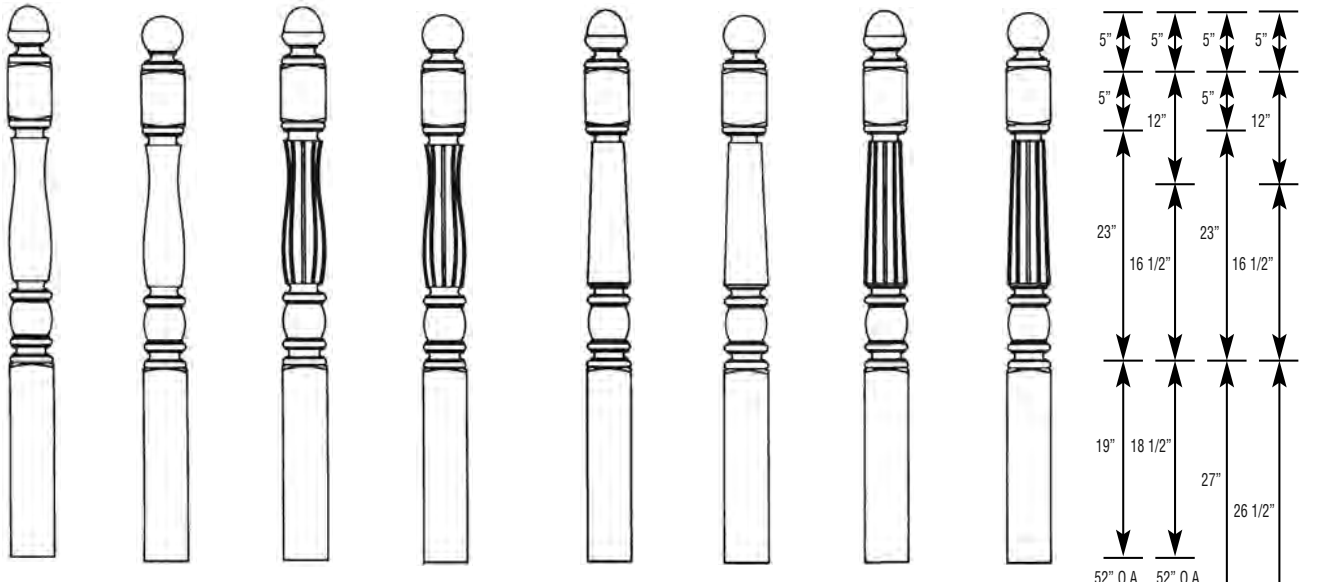

Acorn Top	Ball Top	Fluted Acorn	Fluted Ball	Acorn Top	Ball Top	Fluted Acorn	Fluted Ball
201-3A	201-3B	201-3AF	201-3BF	202-3A	202-3B	202-3AF	202-3BF
201-3.5A	201-3.5B	201-3.5AF	201-3.5BF	202-3.5A	202-3.5B	202-3.5AF	202-3.5BF
201-3LA	201-3LB	201-3LAF	201-3LBF	202-3LA	202-3LB	202-3LAF	202-3LBF
201-3.5LA	201-3.5LB	201-3.5LAF	201-3.5LBF	202-3.5LA	202-3.5LB	202-3.5LAF	202-3.5LBF
201-3A-60	201-3B-60	201-3AF-60	201-3BF-60	202-3A-60	202-3B-60	202-3AF-60	202-3BF-60
201-3.5A-60	201-3.5B-60	201-3.5AF-60	201-3.5BF-60	202-3.5A-60	202-3.5B-60	202-3.5AF-60	202-3.5BF-60
201-3LA-60	201-3LB-60	201-3LAF-60	201-3LBF-60	202-3LA-60	202-3LAB-60	202-3LAF-60	202-3LBF-60
201-3.5LA-60	201-3.5LB-60	201-3.5LAF-60	201-3.5LBF-60	202-3.5LA-60	202-3.5LB-60	202-3.5LAF-60	202-3.5LBF-60

201 DOWEL TOP

202 DOWEL TOP

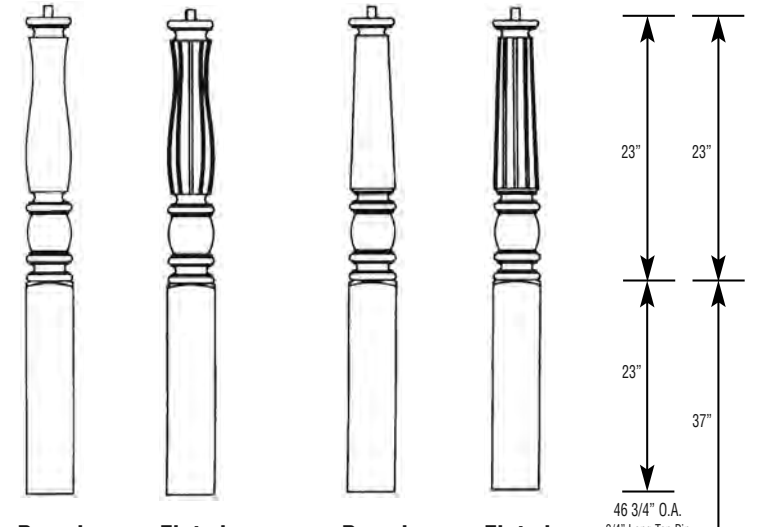

Dowel Top	Fluted Dowel	Dowel Top	Fluted Dowel
201-3D	201-3DF	202-3D	202-3DF
201-3.5D	201-3.5DF	202-3.5D	202-3.5DF
201-3D-60	201-3DF-60	202-3D-60	202-3DF-60
201-3.5D-60	201-3.5DF-60	202-3.5D-60	202-3.5DF-60

HOW TO ORDER NEWELS

2 01 - 3.5 B F - 0

2	Indicates Newels
01	Newel Style (01, 02)
3.5	Newels Size (3", 3.5")
B	Describes Top (A = Acorn, B = Ball, D = Dowel)
F	Indicates Fluted
0	Species of Wood

Newel Sizes
Newel square sizes available in 3", 3.5".

Lengths
Square top newels available in 52" and 60" lengths. For long square tops of 12", specify "L". Example: S-201-3.5LB-0.
Dowel top newels available in 46" and 60" lengths. Dowel top newels have a 3/4" diameter dowel on top. Specify desired newel lengths using part numbers listed above.

Shoe

FSH-01
1/2" sq. opening
CV PC SB ORC ORB

H-03
9/16" sq. opening
PC CV SB ORC ORB

Shoe

PSH-02
1/2" sq. opening
(Pitch shoe with set screw)
CV PC SB ORC ORB

H-05P
9/16" sq. opening
(Pitch shoe with set screw)
PC CV SB ORC ORB

1 Bskt Gothic

M160-44
Ends: 9/16" sq.
Height: 44"
Wt. 4.5 lbs.
SB CV ORC

Plain Gothic

M143-44
Ends: 9/16" sq.
Height: 44"
Wt. 4 lbs.
SB CV ORC

2 Spoon

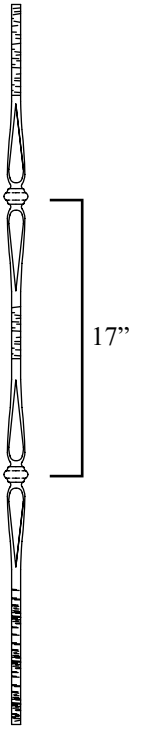

M150-44
Ends: 9/16" sq.
Height: 44"
Wt. 3.8 lbs.
SB CV ORC

1 Spoon

M140-44
Ends: 9/16" sq.
Height: 44"
Wt. 3.5 lbs.
SB CV ORC

1 Rib

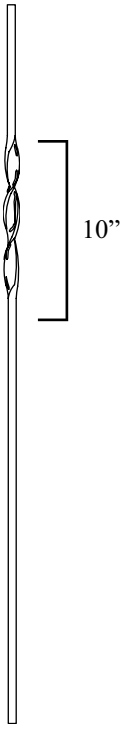

1RIB-44
Ends: 1/2" sq.
Height: 44"
Wt. 3.2 lbs.
SB CV ORC

2 Rib

2RIB-44
Ends: 1/2" sq.
Height: 44"
Wt. 3 lbs.
SB CV ORC

1 Knuckle

1KNUC
Height: 44”
1/2”
SB ORC ORB

2 Knuckle

12KNUC
Height: 44”
1/2”
SB ORC ORB

Plain

PLA-44
Ends: 1/2" sq.
Height: 44"
Wt. 3 lbs.
CV PC SB ORC ORB

LEGEND: **B**=Black (Special Order), **PC**=Powder Coat, **SB**=Satin Black, **CV**=Copper Vein, **ORC**=Oil Rubbed Copper, **ORB**=Oil Rubbed Bronze

Many other styles available for special order

Shoe

M-06
1/2" sq. opening
(with set screw)

H - 06
9/16" sq opening
(with set screw)
SB CV PC ORC ORB

Knuckle

AK-01
1/2" sq. opening
(Adjustable knuckle with square opening and set screw)
CV PC SB ORC ORB

Versatile

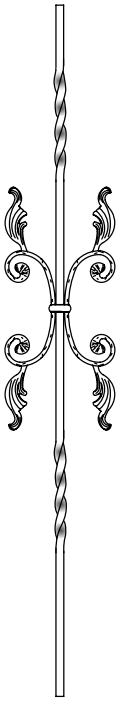

M34044
Ends: 1/2" sq.
Height: 44"
Wt. 4 lbs.
Special Order

Scroll

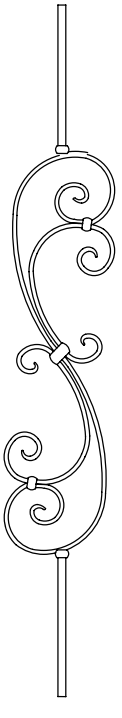

M601
Ends: 1/2"sq.
Height: 44"
Wt. 4 lbs.
SB, CV ORC, ORB

2 Bskt Rib

M85-44
Ends: 1/2" sq.
Height: 44"
Wt. 4 lbs.
SB CV ORC

1 Bskt Rib

M80-44
Ends: 1/2" sq.
Height: 44"
Wt. 3.2 lbs.
SB CV ORC

2 Bskt

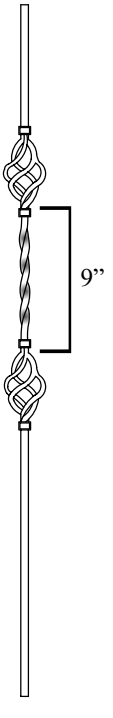

2BASK-44
Ends: 1/2" sq.
Height: 44"
Wt. 4 lbs.
CV PC SB ORC ORB

1 Bskt

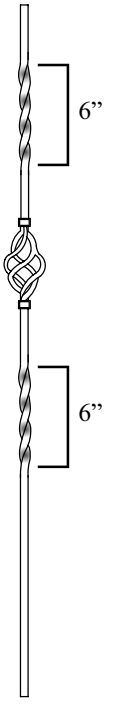

1BASK-44
Ends: 1/2" sq.
Height: 44"
Wt. 3 lbs.
CV PC SB ORC ORB

2 Twist

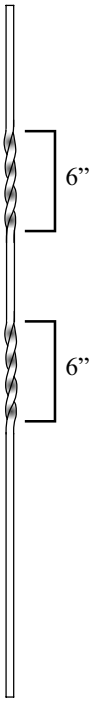

2TW-44
Ends: 1/2" sq.
Height: 44"
Wt. 3 lbs.
CV PC SB ORC ORB

1 Twist

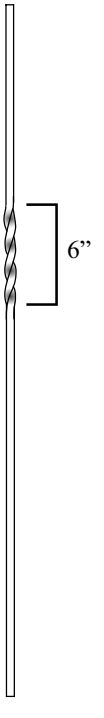

1TW-44
Ends: 1/2" sq.
Height: 44"
Wt. 3 lbs.
CV PC SB ORC ORB

LEGEND: **B**=Black (Special Order), **PC**=Powder Coat, **SB**=Satin Black, **CV**=Copper Vein, **ORC**=Oil Rubbed Copper, **ORB**=Oil Rubbed Bronze

MEGA BALUSTERS

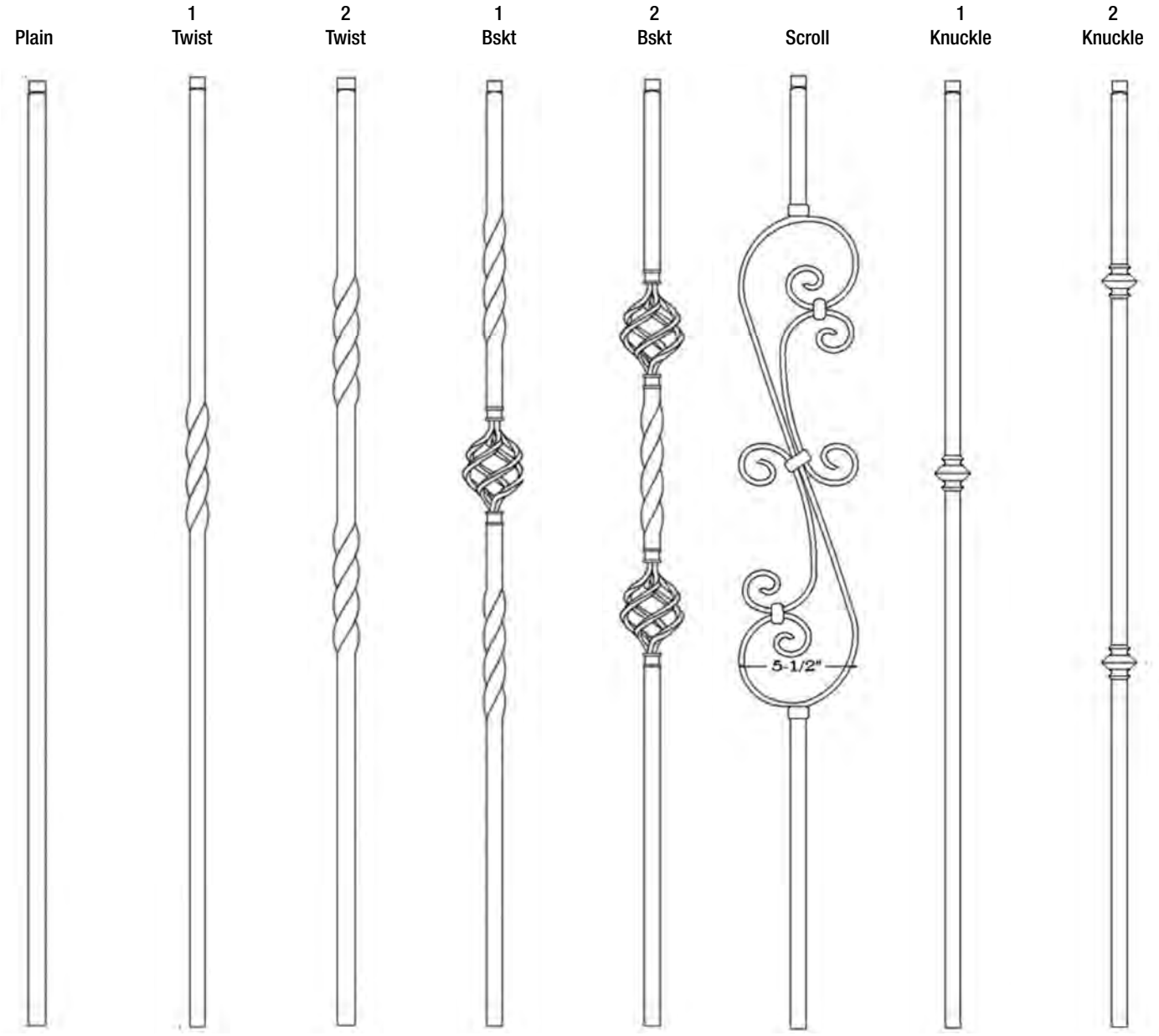

PLA	1TW	2TW-44	1BASK-44	2BASK-44	M601	1KNUC	2KNUC
Height: 44”	Height: 44”	Height: 44”	Height: 44”	Height: 44”	Height: 44”	Height: 44”	Height: 44”
3/4”	3/4”	3/4”	3/4”	3/4”	3/4”	3/4”	3/4”
SB ORC ORB	**SB ORC ORB**	**SB ORC ORB**	**SB ORC ORB**	**SB ORC ORB**	**SB ORC ORB**	**SB ORC ORB**	**SB ORC ORB**

STAIR PARTS

LEGEND: **SB**=Satin Black, **ORC**=Oil Rubbed Copper, **ORB**=Oil Rubbed Bronze

Mega shoes - 3/4” opening
Mega FSH-08 - Flat shoe
Mega M-08 - Flat shoe with set screw
Mega Psh-08 - Pitch shoe
SB ORC ORB

BOX NEWELS

All Stile & Rail Newels - Will have solid 1-3/8” stile, 3/4” Rails and 3/4” Raised or Flat panels.
Flat and Raised Panel Newels - Available with Roman Ogee, Panel Cap, Flat and Raise Panels.
Chamfered Newels - Hollow Newels are Spline Jointed, Solid Newels are Laminated.
Plant-on Newels - All Plant on Newels will use HM503 Molding.
Rosettes - Sold separately and unattached.
Hollow Posts - With no detail will have Lock Mitered Corners.

NEWEL TYPE

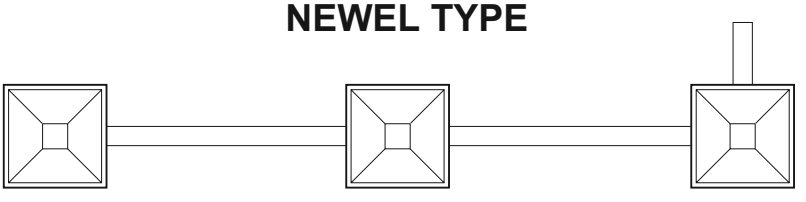

STARTER INTERMEDIATE CORNER

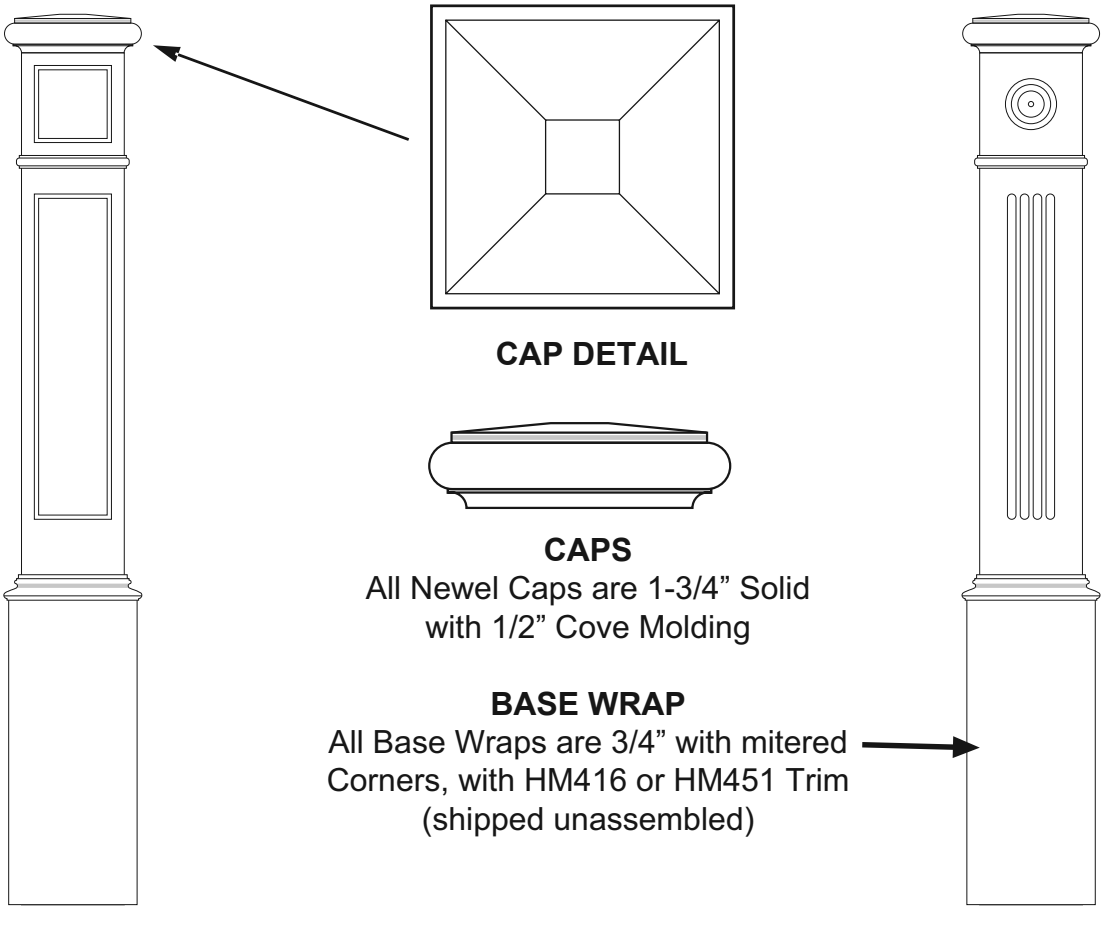

CAP DETAIL

CAPS
All Newel Caps are 1-3/4” Solid
with 1/2” Cove Molding

BASE WRAP
All Base Wraps are 3/4” with mitered
Corners, with HM416 or HM451 Trim
(shipped unassembled)

BOX NEWEL GUIDE

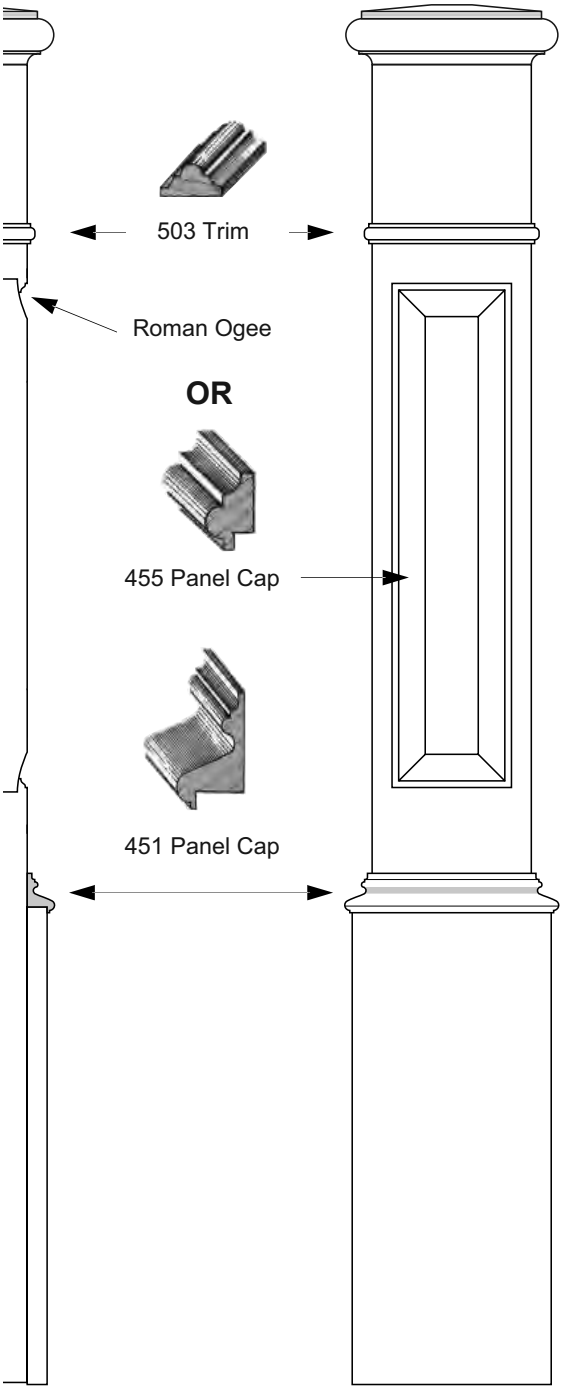

Roman Ogee Raised Panel

Raised Panel Panel Cap

Unattached Base Wrap and Trim Available
Drawing not to Scale

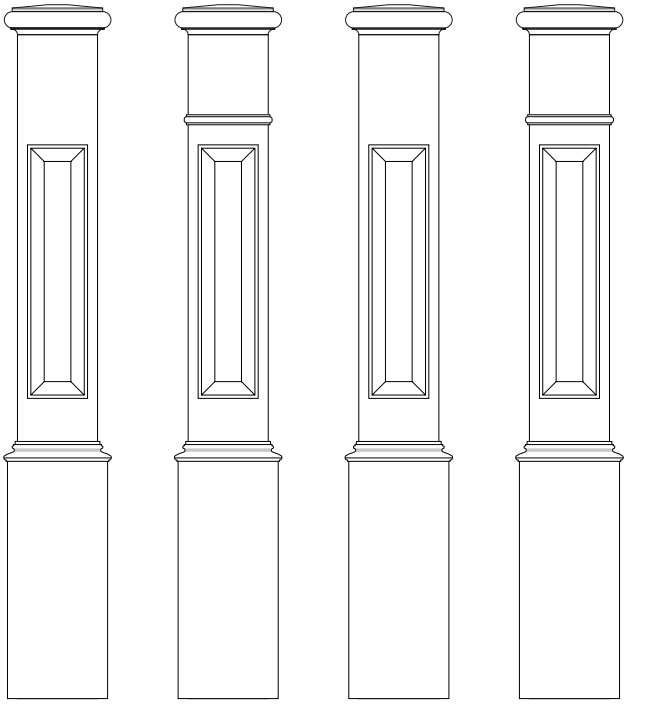

*** #1** Raised Panel Roman Ogee

*** #2** Raised Panel Roman Ogee w/503 Trim Band

*** #3** Raised Panel w/455

*** #4** Raised Panel w/455 & 503 Trim Band

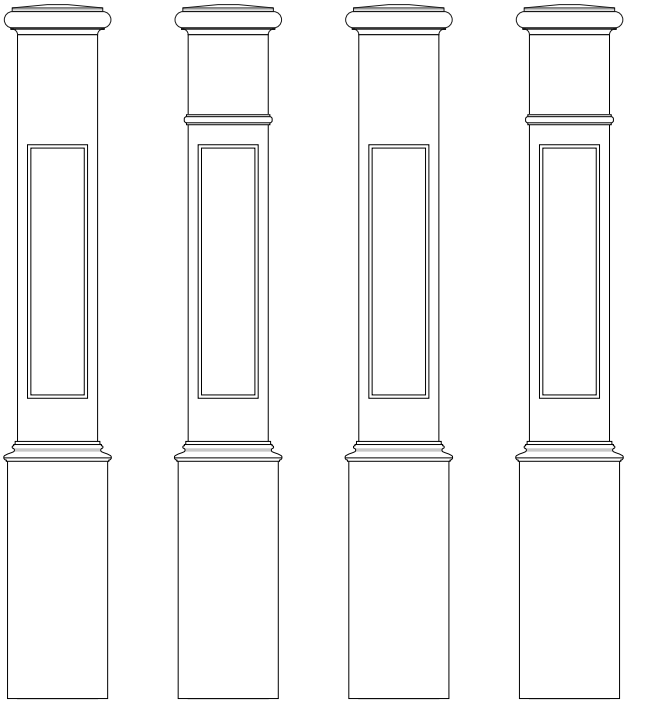

*** #5** Flat Panel Roman Ogee

*** #6** Flat Panel Roman Ogee w/503 Trim Band

*** #7** Flat Panel w/455

*** #8** Flat Panel w/455 & 503 Trim Band

*** Stocked in 5" & 6" KA (2 Day Assembly Required)**

STAIR PARTS

BOX NEWELS

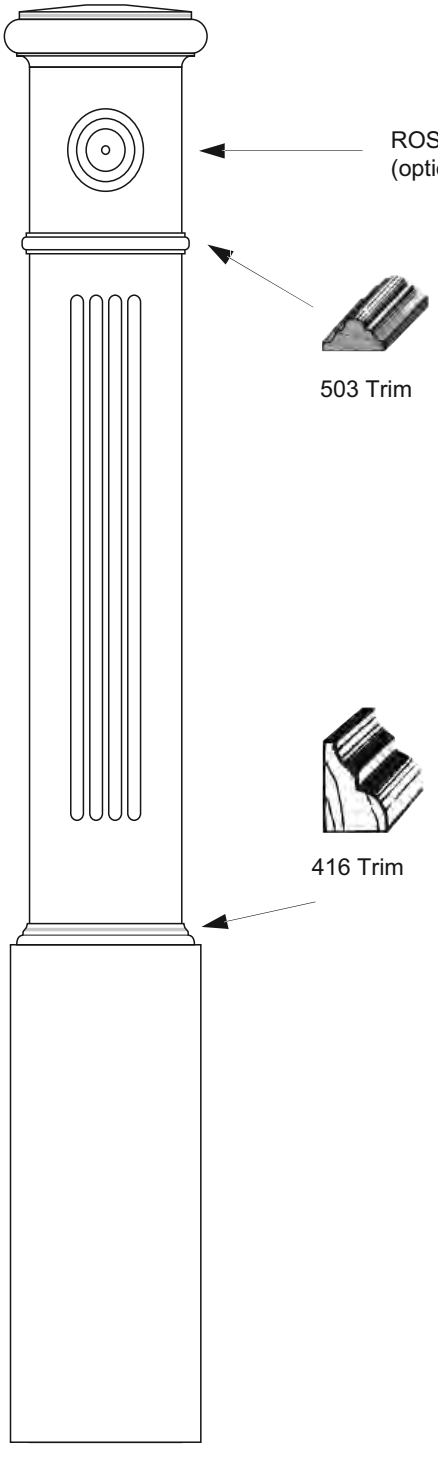

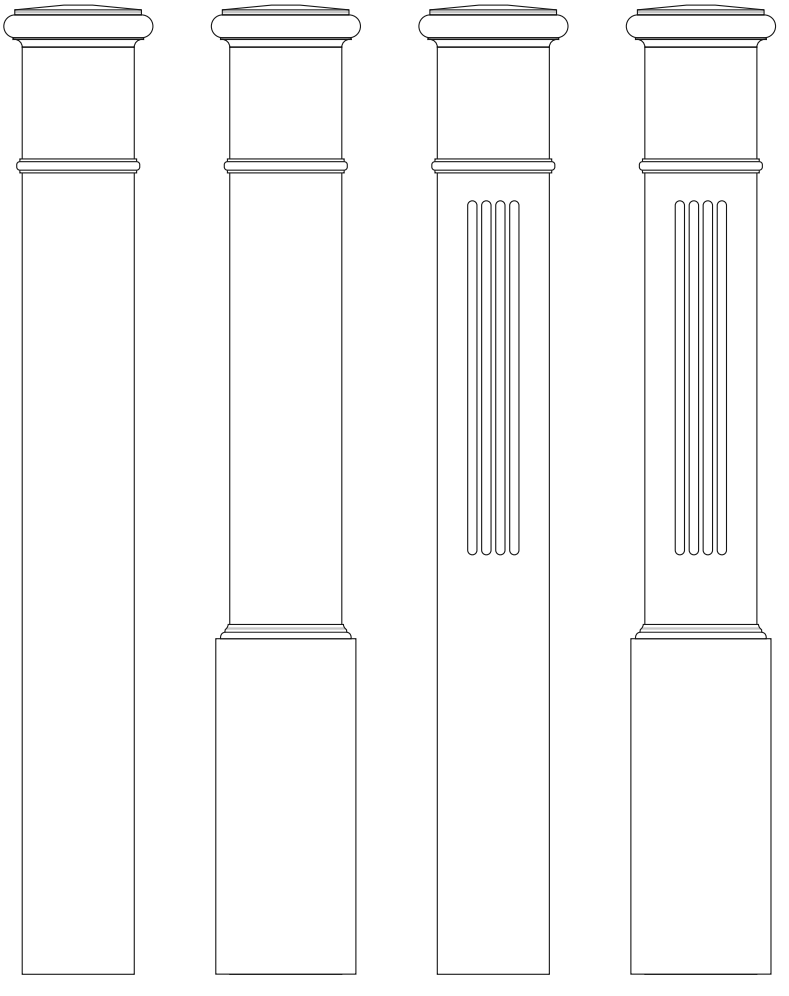

#9
w/503 Trim

#10
Base Wrap
w/503 Trim
Stock
4" **A KA**
5" **A KA**

#11
Fluted
w/503 Trim

#12
Base Wrap
Fluted
503 Trim

Unattached Base Wrap and Trim Available
Rosette Optional
Drawings not to Scale

STAIR PARTS

LEGEND: **O**=Oak, **A**=Alder, **KA**=Knotty Alder, **P**=Poplar, **C**=Cherry, **M**=Maple, **SM**=Soft Maple, **H**=Hickory

BOX NEWELS

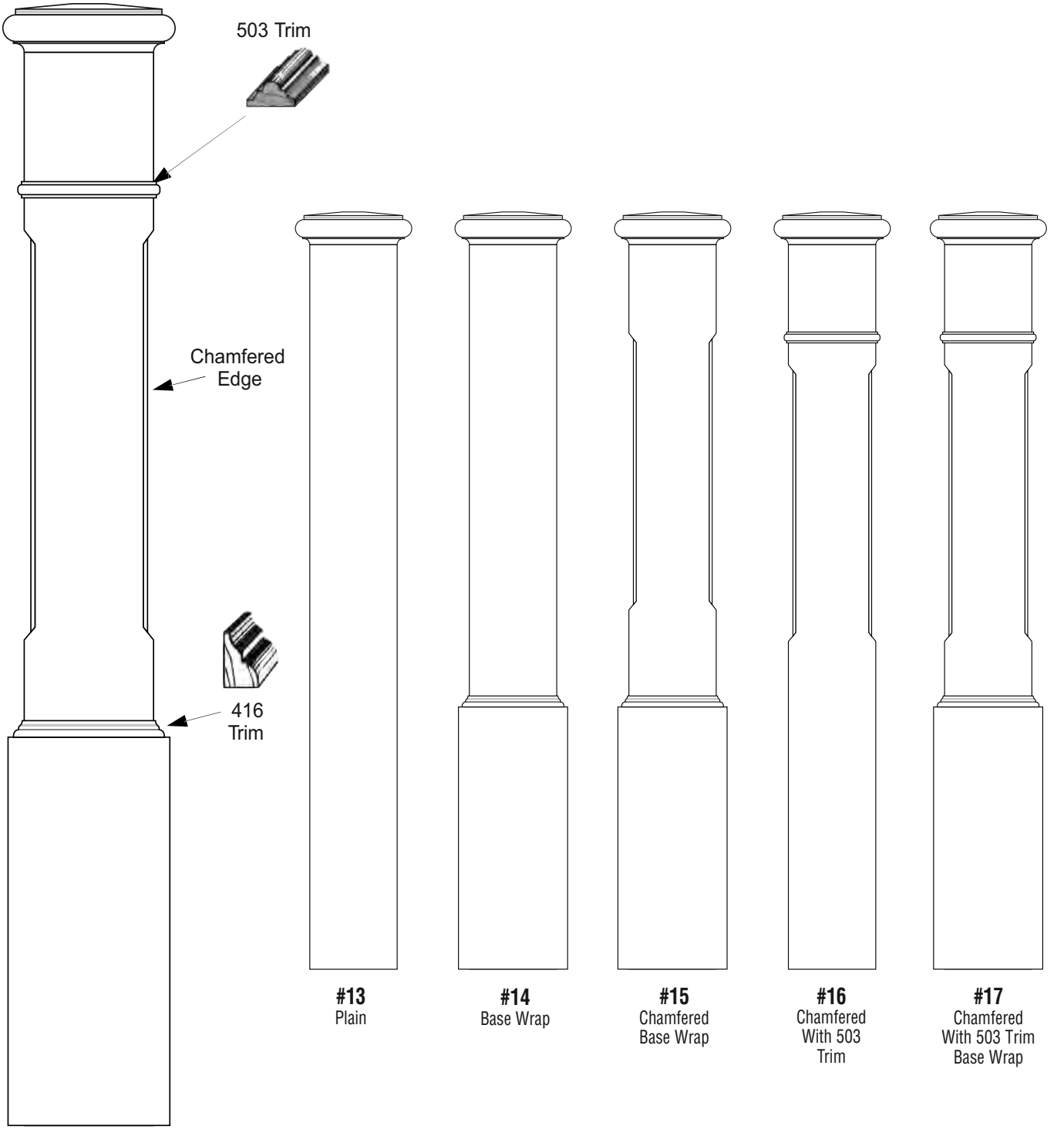

Unattached Base Wrap and Trim Available
Drawing not to Scale

STAIR PARTS

LEGEND: **O**=Oak, **A**=Alder, **KA**=Knotty Alder, **P**=Poplar, **C**=Cherry, **M**=Maple, **SM**=Soft Maple, **H**=Hickory

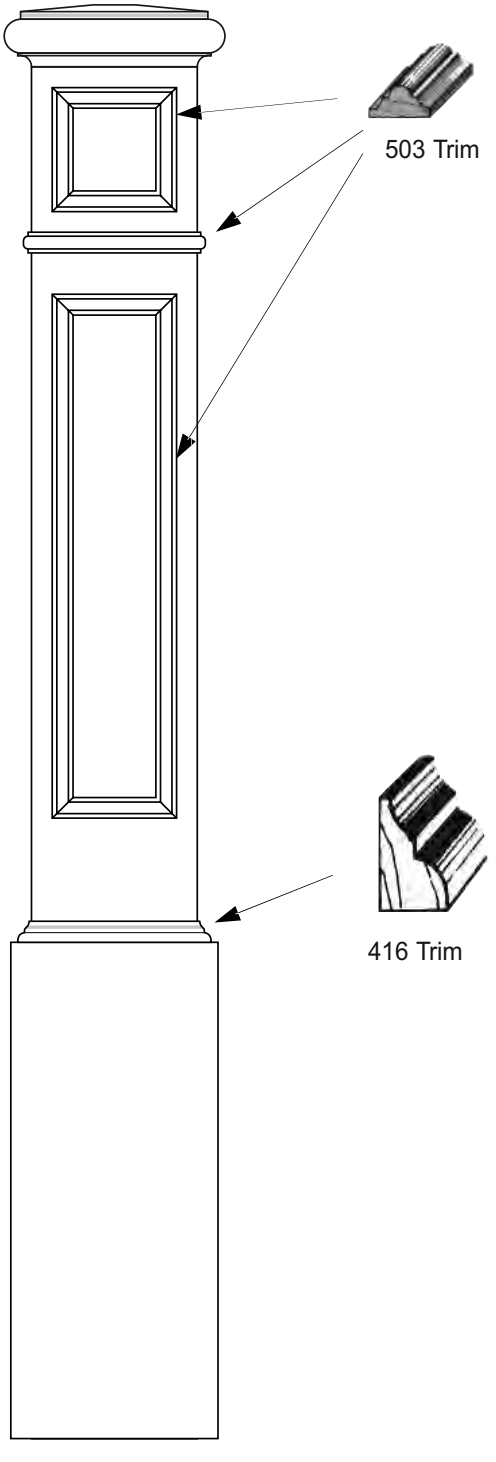

Unattached Base Wrap and Trim Available
Drawings not to Scale

*** Stock Item**

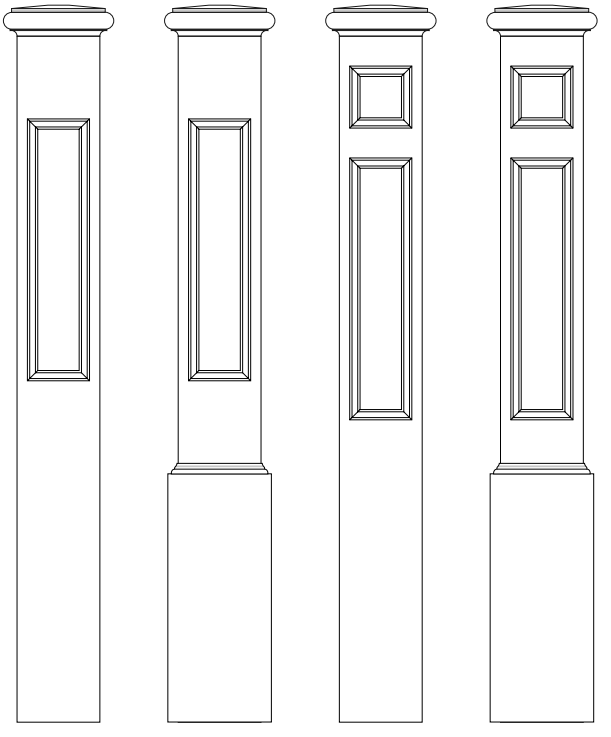

#18
Lower
Plant-on

#19
Lower Plant-on/
Base Wrap

#20
Upper & Lower
Plant-on

#21
Upper & Lower
Plant-on/
Base Wrap

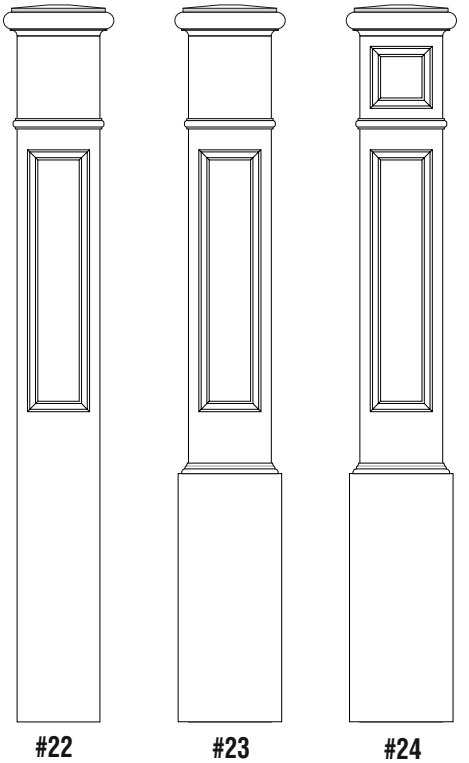

#22
Lower
Plant-on With
503 Trim
* Alder 5”

#23
Lower Plant-on/
Base Wrap
503 Trim

#24
Upper & Lower
Plant-on/Base Wrap
503 Trim

BOX NEWELS

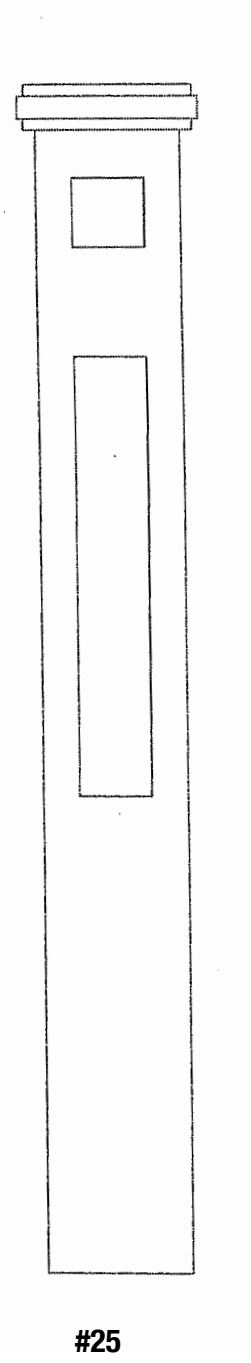

#25
Shaker

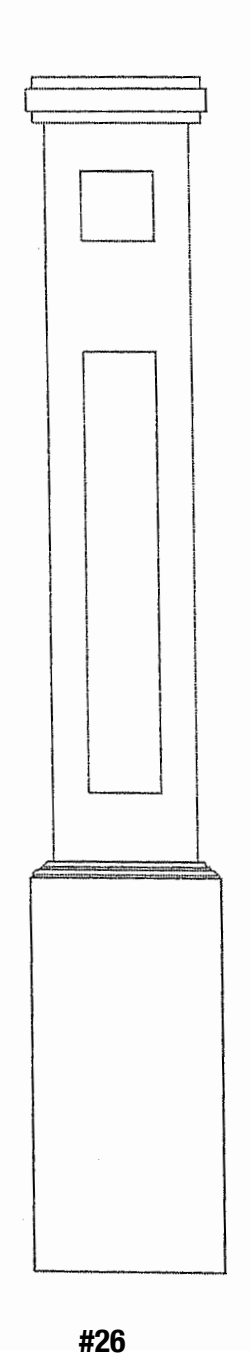

#26
Shaker
w/ Base Wrap

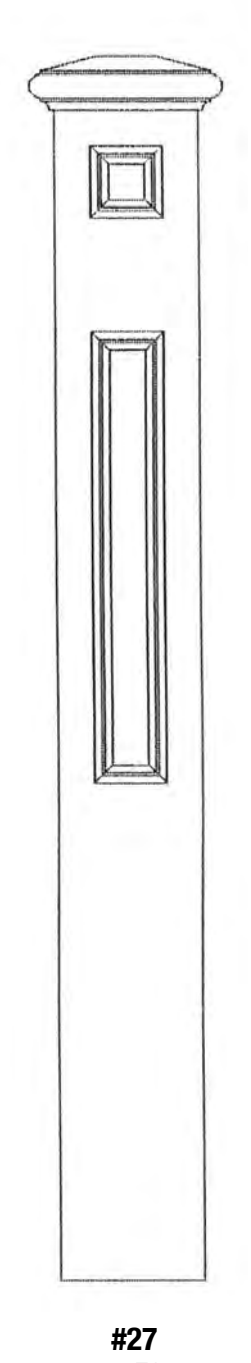

#27
416 Trim

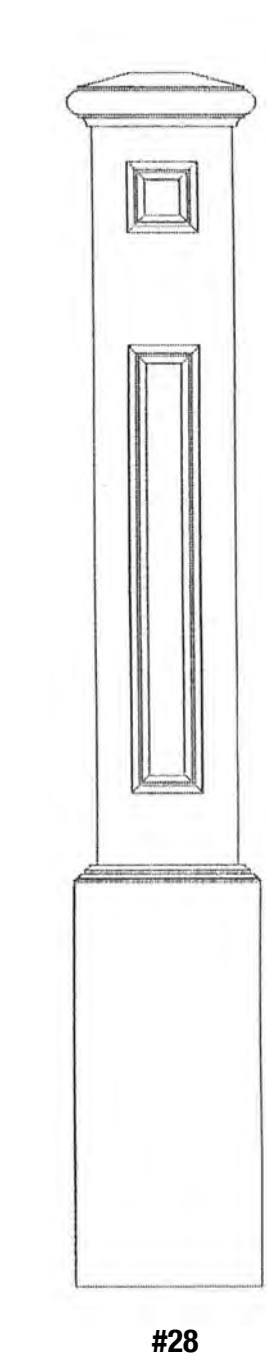

#28
416 Trim
w/Base Wrap

RAILS AND FITTINGS

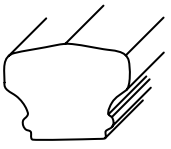

102-1C (clear)
* 102-1B (bending rail)
*102-1BT (tight bending rail)
2 3/4" (W) x 2 1/8" (H)
(1 5/8" bottom)
Available in cherry

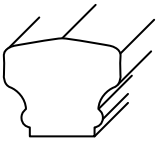

**101-1S (solid cap)
*101-1 (bending rail) at
2 1/2" (W) x 2 1/8" (H)

103-1C (clear)
* 103-1B (bending rail)
2 3/4" (W) x 2 3/4" (H)
(2 1/4" bottom)
Available in cherry

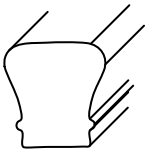

106-1C (clear)
**106-1S (solid cap)
*106-1B (bending rail)
2 1/4" (W) x 2 3/8" (H)
(1 1/2" bottom)

1 3/4" Round
HM 550 (stock)

2" Full Round
100c Oak
100c Maple

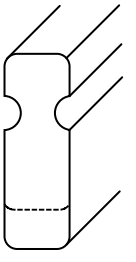

HM 5594 (stock)
1 5/8" x 4"

HM 559 (stock)
1 5/8" x 5"

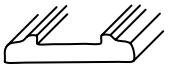

Shoe Rail
403-0 (3/4" x 3" - plow 1 1/4")
403-1 (3/4" x 3 1/2" - plow 1 3/4")

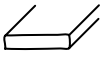

Fillet
402-0 (3/8" x 1 1/4")
402-1 (3/8" x 1 3/4")

*These bending rails come with complete bending molds.
**14'-16' lengths may come with 1 joint in cap layer.

HOW TO ORDER FITTINGS

When ordering fittings for rails, specify the fitting part number followed by the rail number. Example: S-601-102-1.

Upeasing
601-102-1
601-101-1
601-106-1
601-103-1

Upeasing
602-102-1
602-101-1
602-106-1
602-103-1

Overeasing
603-102-1
603-101-1
603-106-1
603-103-1

Level Quarter Turn
604-102-1
604-101-1
604-106-1
604-103-1

Level Quarter Turn w/Cap
604C-102-1
604C-101-1
604C-106-1
604C-103-1

Starting Easing w/Cap
605C-102-1
605C-101-1
605C-106-1
605C-103-1

End Cap
606-102-1
606-101-1
606-106-1
606-103-1

Tandem Cap
606D-102-1
606D-101-1
606D-106-1
606D-103-1

S-Turn
628-L-102-1
628 -R-102-1
n/a 101-1, 103-1
628L-106-1
628R-106-1

Upeasing End
7015
Available in 106-1 only

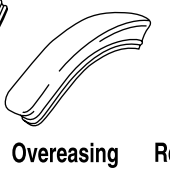

Overeasing End
7016
Available in 106-1 only

Returned End
611-102-1
611-101-1
611-106-1
611-103-1

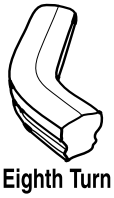

Eighth Turn
624-102-1
624-101-1
624-106-1
624-103-1

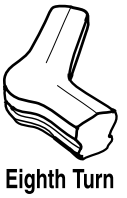

Eighth Turn w/Cap
624C-102-1
624C-101-1
624C-106-1
624C-103-1

LH Turn Out
607L-102-1
607L-101-1
607L-106-1
607L-103-1

RH Turn Out
607R-102-1
607R-101-1
607R-106-1
607R-103-1

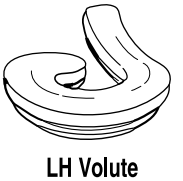

LH Volute
608L-102-1
608L-101-1
608L-106-1
608L-103-1

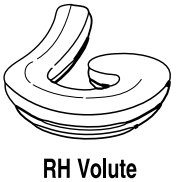

RH Volute
608R-102-1
608R-101-1
608R-106-1
608R-103-1

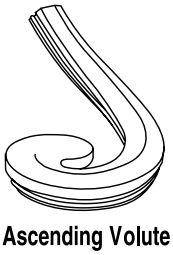

Ascending Volute
616-102-1
616-106-1

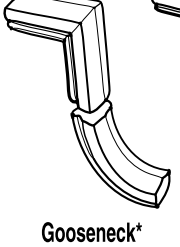

Gooseneck*
609-102-1
609-101-1
609-106-1
609-103-1

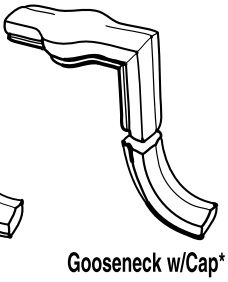

Gooseneck w/Cap*
609C-102-1
609C-101-1
609C-106-1
609C-103-1

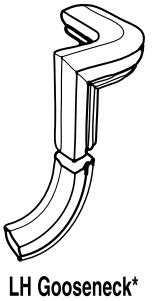

LH Gooseneck*
610L-102-1
610L-101-1
610L-106-1
610L-103-1

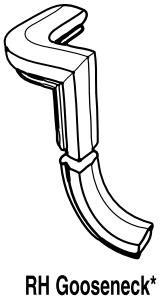

RH Gooseneck*
610R-102-1
610R-101-1
610R-106-1
610R-103-1

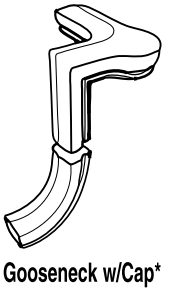

LH Gooseneck w/Cap*
610LC-102-1
610LC-101-1
610LC-106-1
610LC-103-1

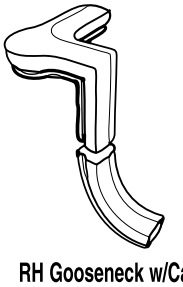

RH Gooseneck w/Cap*
610RC-102-1
610RC-101-1
610RC-106-1
610RC-103-1

***Easing not attached on any goosenecks.**

STAIR PARTS

STARTING STEPS, TREADS, AND RISERS

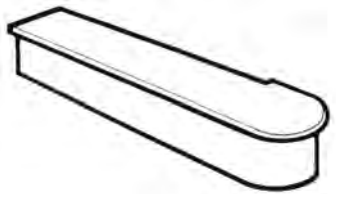

Single End Bullnose
***8010** - 6 3/8" radius bullnose
***8310** - 7 3/8" radius bullnose
***8030** - 8 7/8" radius bullnose
*Special Order

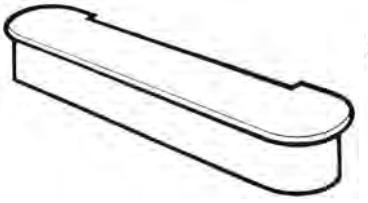

Double End Bullnose
***8015** - 6 3/8" radius bullnose
***8315** - 7 3/8" radius bullnose
***8050** - 8 7/8" radius bullnose
*Special Order

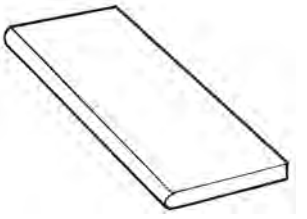

Stair Tread
8070
1" x 11 1/2"
Treads are available Plain, Return LH or RH, or Bullnose Both Ends in the following lengths: 36", 42", 48", 54", 60" **O M**

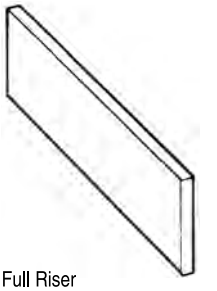

Full Riser
3/4" x 7 1/4"
Risers are available in the following lengths: 36", 42", 48", 54", 60", 72".

False End Bullnose
8010-2 - 6 3/8" radius bullnose
8310-2 - 7 3/16" radius bullnose

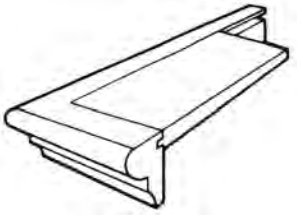

Tread Caps
8071 RH (right hand) **O M A**
8071 LH (left hand) **O M A**
6" x 11 5/8" (7" o.a.)
8071 RH-8 A
8071 LH-8 A
8" x 11 5/8" (9")

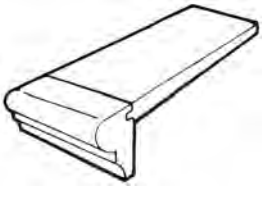

False End
8072 O M A
6" x 11 5/8"
8072-8 A
8" x 11 5/8"

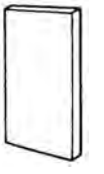

False Riser
8076 O M A
6" x 7 3/4"
8076-8 A
8" x 7 3/4"

ACCESSORIES

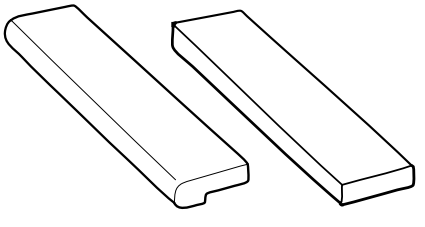

Landing Tread
8090-5
1" x 6"

Shoe Plate
700-6
1" x 6"
KA P A M O

700-8 - A P
1" x 8"

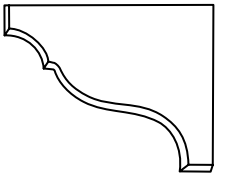

Corbel
579
7" x 9"
A O M P C

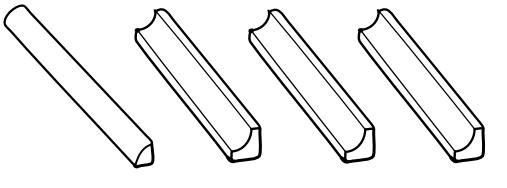

Base Shoe Mold
HM 514
1/2" x 3/4"

Cove Mold
HM 312
3/4" x 3/4"

Cove Mold
HM 313
1/2" x 1/2"

Cove Mold
HM 314
5/8" x 5/8"

STAIR PARTS

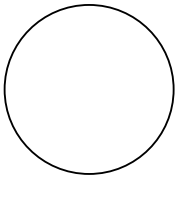

Round Rosette
501-4
1" x 4 1/2" diameter

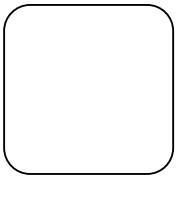

Square Rosette
503-4
1" x 4 1/2" x 4 1/2"

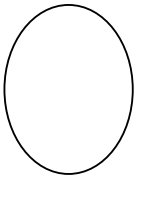

Oval Rosette
505-4
1" x 4 1/2" x 6 1/4"

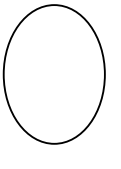

Small Oval Rosette
504-4
1" x 3 1/2" x 5"

Stair Bracket
3002
Brass Plated

3002BN
Brushed Nickel

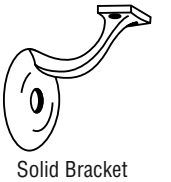

Solid Bracket
3013
Brushed Chrome
Antique Brass
Polished Chrome
Bright Brass
Oil Rubbed Bronze
Antique Nickel
Oil Rubbed Copper
Silver Vein - **3012**
Copper Vein - **3011**
Black - **3008**
Brushed Nickel - **3007**

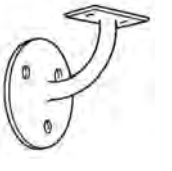

Polished Bracket
3027
Solid Brass
Special Order

*** Special Order**
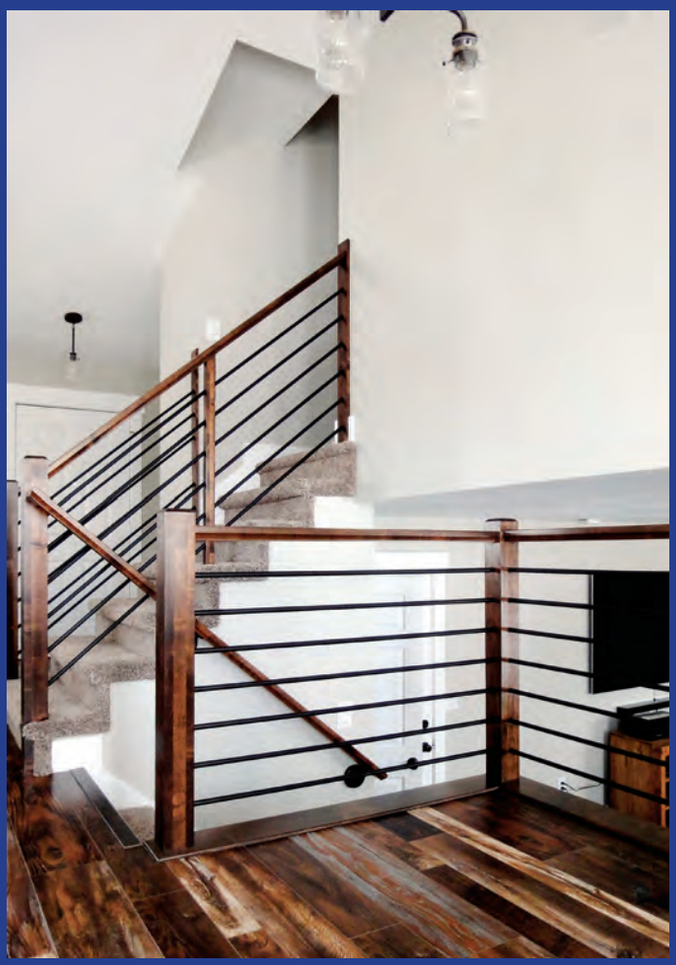
WELCOME
TO